ComfortStar®
Air Conditioning & Heating Products

Installation, Operation, and Maintenance

Packaged Rooftop Air Conditioners Foundation ™

Cooling and Electric

7.5 to 12.5 Tons, 60 Hz

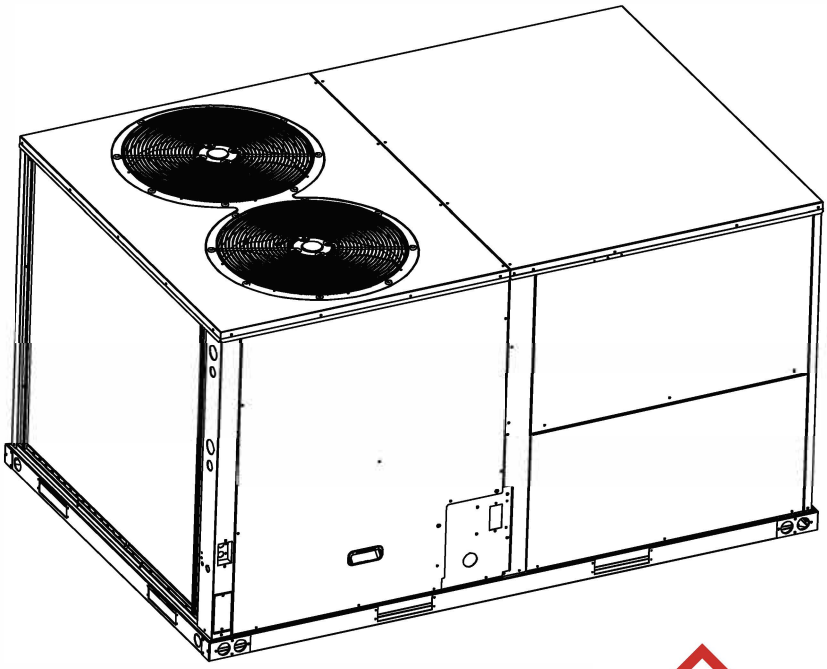

A2L
R454B

⚠ SAFETY WARNING

Only qualified personnel should install and service the equipment. The installation, starting up, and servicing of heating, ventilating, and air-conditioning equipment can be hazardous and requires specific knowledge and training. Improperly installed, adjusted or altered equipment by an unqualified person could result in death or serious injury. When working on the equipment, observe all precautions in the literature and on the tags, stickers, and labels that are attached to the equipment.

⚠ WARNING

PROPERTY OR PERSONAL INJURY HAZARD

A2L
R454B

Risk of fire. Flammable refrigerant used.
To be repaired only by trained service personnel. Do not puncture refrigerant tubing.
Auxiliary devices which may be ignition sources shall not be installed in the ductwork, other than auxiliary devices listed for use with the specific appliance. See instructions.
Dispose of refrigerant properly in accordance with federal or local regulations.
Failure to follow proper R-454B dissipation system installation instructions can result in property damage, personal injury, or death. If any fault codes are listed, please troubleshoot to prevent system malfunction.

⚠ WARNING

PERSONAL INJURY OR PROPERTY DAMAGE

These instructions are exclusively intended for qualified contractors and authorized installers.
Work on the refrigerant circuit with flammable refrigerant in safety group A2L may only be carried out by authorized heating contractors.
These heating contractors must be trained in accordance with UL 60335-2-40, Section HH. The certificate of competence from an industry accredited body is required.
Work on electrical equipment may only be carried out by a qualified electrician.
Before initial commissioning, all safety related points must be checked by the particular certified heating contractors. The system must be commissioned by the system installer or a qualified person authorized by the installer.

⚠ WARNING

Attention is drawn to the fact that additional transportation regulations may exist with respect to equipment containing flammable gas.
The maximum number of pieces of equipment or the configuration of the equipment permitted to be transported together will be determined by the applicable transport regulations.
Storage package protection should be constructed such a way that mechanical damage to the equipment inside the package will not cause leak of the REFRIGERANT CHARGE. The maximum number of pieces of equipment permitted to be stored together will be determined by local regulations.

Introduction

Read this manual thoroughly before operating or servicing this unit.

And keep in a safe place for future reference by a serviceman.

Category I, the combustion system is fan-assisted. A Category I fan-assisted furnace is an appliance equipped with an integral mechanical means to either draw or force products of combustion through the combustion chamber and/or heat exchanger.

Warnings, Cautions, and Notices

Safety advisories appear throughout this manual as required. Your personal safety and the proper operation of this machine depend upon the strict observance of these precautions.

The three types of advisories are defined as follows:

⚠ WARNING	Indicates a potentially hazardous situation which, if not avoided, could result in death or serious injury.
⚠ CAUTION	Indicates a potentially hazardous situation which, if not avoided, could result in minor or moderate injury. It could also be used to alert against unsafe practices.
NOTICE	Indicates a situation that could result in equipment or property-damage only accidents.

⚠ WARNING

LEAK DETECTION SYSTEM installed. Unit must be powered except for service.

⚠ WARNING

Do not use means to accelerate the defrosting process or to clean, other than those recommended by the manufacturer.
The appliance shall be stored in a room that does not have continuously operating ignition sources (for example: open flames, an operating gas appliance or an operating electric heater).
Do not pierce or burn the unit.
Be aware that refrigerants may not contain an odour.

C ETL LISTED US
Intertek
3124627

Important Environmental Concerns

Scientific research has shown that certain man-made chemicals can affect the earth's naturally occurring stratospheric ozone layer when released to the atmosphere. In particular, several of the identified chemicals that may affect the ozone layer are refrigerants that contain Chlorine, Fluorine and Carbon (CFCs) and those containing Hydrogen, Chlorine, Fluorine and Carbon (HCFCs). Not all refrigerants containing these compounds have the same potential impact to the environment. Comfortstar advocates the responsible handling of all refrigerants-including industry replacements for CFCs and HCFCs such as saturated or unsaturated HFCs and HCFCs.

⚠ CAUTION

ENVIRONMENTAL HAZARD

Failure to follow this caution may result in environmental damage.
Do not vent refrigerant to atmosphere. Recover during system repair or final unit disposal.

Important Responsible Refrigerant Practices

Comfortstar believes that responsible refrigerant practices are important to the environment, our customers, and the air conditioning industry. All technicians who handle refrigerants must be certified according to local rules. For the USA, the Federal Clean Air Act (Section 608) sets forth the requirements for handling, reclaiming, recovering and recycling of certain refrigerants and the equipment that is used in these service procedures. In addition, some states or municipalities may have additional requirements that must also be adhered to for responsible management of refrigerants. Know the applicable laws and follow them.

⚠ WARNING

Proper Field Wiring and Grounding Required!

Failure to follow code could result in death or serious injury.
All field wiring MUST be performed by qualified personnel. Improperly installed and grounded field wiring poses FIRE and ELECTROCUTION hazards. To avoid these hazards, you MUST follow requirements for field wiring installation and grounding as described in NEC and your local/state/national electrical codes.

⚠ WARNING

Follow EHS Policies!

Failure to follow instructions below could result in death or serious injury.

- **All Comfortstar personnel must follow the company's Environmental, Health and Safety (EHS) policies when performing work such as hot work, electrical, fall protection, lockout/tagout, refrigerant handling, etc. Where local regulations are more stringent than these policies, those regulations supersede these policies.**
- **Non-Comfortstar personnel should always follow local regulations.**

⚠ WARNING

Personal Protective Equipment (PPE) Required!

Failure to wear proper PPE for the job being undertaken could result in death or serious injury.
Technicians, in order to protect themselves from potential electrical, mechanical, and chemical hazards, MUST follow precautions in this manual and on the tags, stickers, and labels, as well as the instructions below:

- **Before installing/servicing this unit, technicians MUST put on all PPE required for the work being undertaken (Examples; cut resistant gloves/sleeves, butyl gloves, safety glasses, hard hat/bump cap, fall protection, electrical PPE and arc flash clothing). ALWAYS refer to appropriate Safety Data Sheets (SDS) and OSHA guidelines for proper PPE.**
- **When working with or around hazardous chemicals, ALWAYS refer to the appropriate SDS and OSHA/GHS (Global Harmonized System of Classification and Labelling of Chemicals) guidelines for information on allowable personal exposure levels, proper respiratory protection and handling instructions.**
- **If there is a risk of energized electrical contact, arc, or flash, technicians MUST put on all PPE in accordance with OSHA, NFPA 70E, or other country-specific requirements for arc flash protection, PRIOR to servicing the unit. NEVER PERFORM ANY SWITCHING, DISCONNECTING, OR VOLTAGE TESTING WITHOUT PROPER ELECTRICAL PPE AND ARC FLASH CLOTHING. ENSURE ELECTRICAL METERS AND EQUIPMENT ARE PROPERLY RATED FOR INTENDED VOLTAGE.**

⚠ WARNING

This product can expose you to chemicals including lead, which are known to the state of california to cause cancer and birth defects or other reproductive harm. For more information go to www.p65Warnings.ca.gov

This appliance is not intended for use by persons (including children) with reduced physical, sensory or mental capabilities, or lack of experience and knowledge, unless they have been given supervision or instruction concerning use of the appliance by a person responsible for their safety.
Children should be supervised to ensure that they do not play with the appliance.

Overview of Manual

One copy of this document ships inside the control panel of each unit and is customer property. It must be retained by the unit's maintenance personnel.

Important: *Do not release refrigerant to the atmosphere! If adding or removing refrigerant is required, the service technician must comply with all federal, state, and local laws.*

This booklet describes the proper installation, startup, operation, and maintenance procedures for air cooled systems.

By carefully reviewing the information within this manual and following the instructions, the risk of improper operation and/or component damage will be minimized.

It is important that periodic maintenance be performed to help assure trouble free operation. A maintenance schedule is provided at the end of this manual. Should equipment failure occur, contact a qualified service organization with qualified, experienced HVAC technicians to properly diagnose and repair this equipment.

Copyright

This document and the information in it are the property of Comfortstar, and may not be used or reproduced in whole or in part without written permission. Comfortstar reserves the right to revise this publication at any time, and to make changes to its content without obligation to notify any person of such revision or change.

Trademarks

All trademarks referenced in this document are the trademarks of their respective owners.

Revision History

- Add california 65 Warnings

The furnace area must be kept clear and free of combustible materials, gasoline, and other flammable vapors and liquids.

The furnace must be kept free and clear of insulating material, with instructions to examine the furnace area when the furnace is installed or when insulation is added and advising that insulating materials might be combustible.

Should the gas supply fail to shut off or if overheating occurs, shut off the gas valve to the furnace before shutting off the electrical supply.

Do not use this furnace if any part has been under water. A flood-damaged furnace is extremely dangerous. Attempts to use the furnace can result in fire or explosion. A qualified service agency should be contacted to inspect the furnace and to replace all gas controls, control system parts, electrical parts that have been wet or the furnace if deemed necessary.

⚠ WARNING

PERSONAL INJURY HAZARD

Do not, under any circumstances, connect return ductwork to any other heat producing device such as fireplace insert, stove, etc.Unauthorized use of such devices may result in fire, carbon monoxide poisoning, explosion, personal injury or property damage.

Table of Contents

General Information 7
- Overview of Manual 7
- Unit Inspection 7
- Unit Storage 7
- Unit Description 8

Dimensional Data 10

Weights 14
- Rigging 14

Installation 15
- Unit Foundation 15
- General Unit Requirements..... 15
- Main Unit Power..... 17
- External Unit Power Supply 21
- Through the Base Gas Utility Option 22
- Refrigerant Sensor..... 23

Pre Start 24

Start Up 25
- Electromechanical Controls - Sequence Of Operation 25
- Two-Speed Indoor Fan Control 26
- Compressor Start-Up 27
- Heating Start-Up 28
- Final System Set Up 28
- Refrigerant Charge and Room Area Limitations..... 28

Maintenance 32
- Fan Belt Adjustment-Belt Drive Units 36
- Monthly Maintenance..... 37

Troubleshooting..... 42
- Standard Troubleshooting 42
- Resetting Cooling and Heating Lockouts 42

Wiring Diagrams 45

Explanation of symbols displayed on the unit

A2L R454B	**DANGER**	This symbol shows that this appliance used a mild flammable refrigerant. If the refrigerant is leaked and exposed to an external ignition source, there is a risk of fire.
≥ A m²	**WARNING**	This symbol shows that appliance shall be installed, operated and stored in a room with a floor area not less than the minimum room area.
	CAUTION	This symbol shows that the operation manual should be read carefully.
	CAUTION	This symbol shows that a service personnel should be handling this equipment with reference to the installation manual.
	CAUTION	This symbol shows that information is available such as the operating manual orinstallation manual.
① = kg ② - kg ①+② = kg ② ①	**CAUTION**	This symbol shows that when addition of charge is required by the manufacturer installation instructions for completing the refrigerating system .Recorded the resulting total refrigerant charge for each refrigerating system.

General Information

⚠ WARNING

Fiberglass Wool!

Exposure to glass wool fibers without all necessary PPE equipment could result in cancer, respiratory, skin or eye irritation, which could result in death or serious injury. Disturbing the insulation in this product during installation, maintenance or repair will expose you to airborne particles of glass wool fibers and ceramic fibers known to the state of California to cause cancer through inhalation.
You MUST wear all necessary Personal Protective Equipment (PPE) including gloves, eye protection, a NIOSH approved dust/mist respirator, long sleeves and pants when working with products containing fiberglass wool.

Precautionary Measures:

- **Avoid breathing fiberglass dust.**
- **Use a NIOSH approved dust/mist respirator.**
- **Avoid contact with the skin or eyes. Wear long-sleeved, loose-fitting clothing, gloves, and eye protection.**
- **Wash clothes separately from other clothing; rinse washer thoroughly.**
- **Operations such as sawing, blowing, tear-out, and spraying may generate fiber concentrations requiring additional respiratory protection. Use the appropriate NIOSH approved respirator.**

First Aid Measures:

- **Eye Contact - Flush eyes with water to remove dust. If symptoms persist, seek medical attention.**
- **Skin Contact - Wash affected areas gently with soap and warm water after handling.**

Overview of Manual

Note: *One copy of this document ships inside the control panel of each unit and is customer property. It must be retained by the unit's maintenance personnel.*

This booklet describes proper installation, operation, and maintenance procedures for air cooled systems. By carefully reviewing the information within this manual and following the instructions, the risk ofimproper operation and/or component damage will be minimized.

It is important that periodic maintenance be performed to help assure trouble free operation. A maintenance schedule is provided at the end of this manual.

Unit Inspection

To protect against loss due to damage incurred in transit, perform inspection immediately upon receipt of the unit.

Exterior Inspection

If the job site inspection reveals damage or material shortages, file a claim with the carrier immediately. Specify the type and extent of the damage on the bill of lading before signing. Notify the appropriate sales representative.

Important: *Do not proceed with installation of a damaged unit without sales representative's approval.*

- Visually inspect the complete exterior for signs of shipping damages to unit or packing material.
- Verify that the nameplate data matches the sales order and bill oflading.
- Verify that the unit is properly equipped and there are no material shortages.
- Verify that the power supply complies with the unit nameplate specifications.

Inspection for Concealed Damage

Visually inspect the components for concealed damage as soon as possible after delivery and before it is stored.

If concealed damage is discovered:

- Notify the carrier's terminal of the damage immediately by phone and by mail.
- Concealed damage must be reported within 15 days.
- Request an immediate, joint inspection of the damage with the carrier and consignee.
- Stop unpacking the unit.
- Do not remove damaged material from receiving location.
- Take photos of the damage, if possible.
- The owner must provide reasonable evidence that the damage did not occur after delivery.

Unit Storage

Take precautions to prevent condensate from forming inside the unit's electrical compartments and motors if:

- The unit is stored before it is installed; or,
- The unit is set on the roof curb, and temporary heat is provided in the building. Isolate all side panel service entrances and base pan openings (e.g., conduit holes, S/A and R/ A openings, and flue openings) from the ambient air until the unit is ready for start-up.

Note: *Do not use the unit's heater for temporary heat without first completing the start-up.*

The manufacturer will not assume any responsibility for equipment damage resulting from condensate accumulation on the unit's electrical and/or mechanical components.

⚠ WARNING

ELECTRICAL OPERATION HAZARD

Failure to follow this warning could result in personal injury or death.
Before installing or servicing the unit, always turn off all power to unit.
There may be more than one disconnect switch. Turn off accessory heater power if applicable. Lock out and tag switch with a suitable warning label.

Unit Description

Before shipment, each unit is leak tested, dehydrated, charged with refrigerant and compressor oil, and run tested for proper control operation.

Direct-drive, vertical discharge condenser fans are provided with built-in thermal overload protection.

System Input Devices and Functions

The unit must have a thermostat input in order to operate.

The descriptions of the following basic input devices used within the unit are to acquaint the operator with their function as they interface with the various features. Refer to the unit's electrical schematic for the specific device connections. The following controls are available from the factory for field installation.

Drain Pan Condensate Overflow Switch (Optional)

This input incorporates the Condensate Overflow Switch (COF) mounted on the drain pan. When the condensate level reaches the trip point, the COF relay energizes and opens the 24 Vac control circuit, disabling the unit. A delay timer prevents the unit from starting for 7 minutes.

Discharge Line Thermostat Control

The high pressure controls and the discharge line thermostat signals are wired in series and connected to the safety input of the LSD. The compressor contactor coil is connected to the 'CC' terminal of the LSD. If the high pressure control switch or the discharge line thermostat is open, the 24 Vac signal to the SI input of the LSD is interrupted and the compressor contactor coil supply is disabled by the LSD. It has an automatic lockout.

The high pressure controls and discharge line thermostats are wired in the system protection detection port. If the high pressure control switch or the discharge line thermostat is open, the main control board will turn off the compressor of the corresponding system. There is no automatic lockout.

Evaporator Frost Control

This input incorporates the Evaporator Frost Control mounted in the indoor coil and can be activated by closing a field supplied contact installed in parallel with the Frost Control.

If this circuit is open before the compressor is started, the compressor will not be allowed to operate. Anytime this circuit is opened for 5 continuous seconds during compressor operation, the compressor for that circuit is immediately turned "Off". The compressor will not be allowed to restart for a minimum of 3 minutes should the Frost Control close.

The units come equipped with a factory wired R-454B leak detection to ensure safe operation during a leak. The system consists of a bracket, a PCB, a A2L Detection Sensor. Failure to install this system will result in potentially hazardous conditions and improper equipment operation, and void all system warranties and liabilities.

Sensors

High Temperature Sensor (BAYFRST003*)

This sensor connects to the Emergency Stop Input on the LTB and provides high limit "shutdown" of the unit. The sensor is used to detect high temperatures due to fire in the air conditioning or ventilation ducts. The sensor is designed to mount directly to the sheet metal duct. Each kit contains two sensors. The return air duct sensor (X1310004001) is set to open at 135°F.

The supply air duct sensor (X1310004002) is set to open at 240°F. The control can be reset after the temperature has been lowered approximately 25°F below the cutout setpoint.

Thermostat (TCONT802AS32DA)

This thermostat is a multi-stage 3 heat/2 cool, autochangeover digital display thermostat. It is a programmable thermostat, and a 7-day programmable stat with night setback shall be available. In addition, it is wall mounted.

Thermostat (TCONT402AN32DA)

This thermostat is a multi-stage 3 heat/2 cool, auto changeover digital display thermostat. It is a nonprogrammable, wall-mounted thermostat, and it can be used for economizer operation.

Variable Frequency Drive (VFD)

Variable Frequency Drive (VFD) can automatically adjust the indoor fan motor speed in sequence with the unit's ventilation, cooling and heating operation. Per ASHRAE 90.1-2016 and IECC*-2015 standards, during the first stage of cooling operation the VFD will adjust the fan motor to provide 100%/70%/65% of the design airflow rate for the unit, according to the outdoor ambient temperature. When the call for the second stage of cooling is required, the VFD will allow the design airflow rate for the unit established (100%). During the heating mode, the VFD will allow total design airflow rate (100%) operation. During ventilation mode, the VFD will allow total design airflow rate (100%) operation.

Refrigerant Sensor

The units come equipped with 2 factory wired R-454B leak detections to ensure safe operation during a leak. Failure to install this system will result in potentially hazardous conditions and improper equipment operation, and void all system warranties and liabilities.

Dimensional Data

Below figure illustrates the minimum operating and service clearances for either a single or multiple unit installation. These clearances are the minimum distances necessary to assure adequate serviceability, cataloged unit capacity, and peak operating efficiency.

Providing less than the recommended clearances may result in condenser coil starvation, "short-circuiting" of exhaust and economizer airflows, or recirculation of hot condenser air.

⚠ WARNING

PERSONAL INJURY / PROPERTY DAMAGE HAZARD

Only use this unit in well-ventilated spaces and ensure that there are no obstructions that could impede the airflow into and out of the unit.
Do not use this unit in the following locations:
- Locations with mineral oil.
- Locations with saline atmospheres, such as seaside locations.
- Locations with sulphurous atmospheres, such as near natural hot springs.
- Where high voltage electricity is present, such as in certain industrial locations.
- On vehicles or vessels, such as trucks or ferry boats.
- Where exposure to oily or very humid air may occur, such as kitchens.
- In proximity to sources of electromagnetic radiation, such as high-frequency transmitters or other high strength radiation devices.

Figure 1. Typical installation clearance for single and multiple unit applications (in inches)

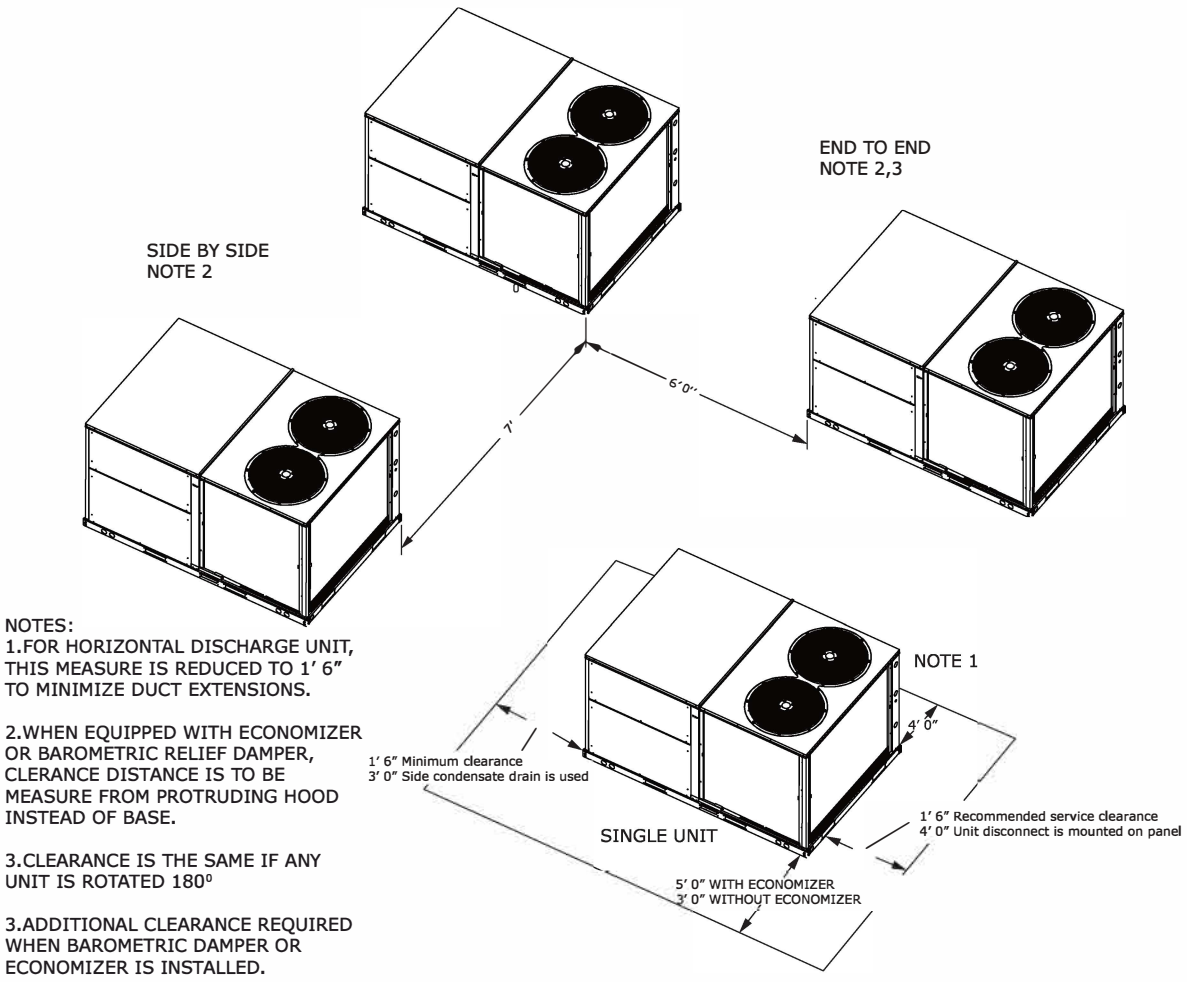

Figure 2. Gas/electric units — overview

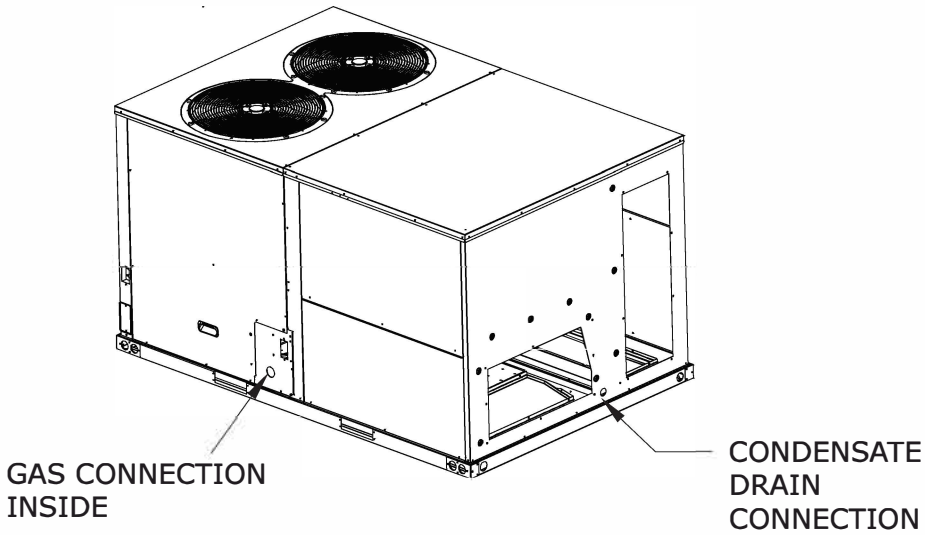

Figure 3. Gas/electric units — front and side views (in inches)

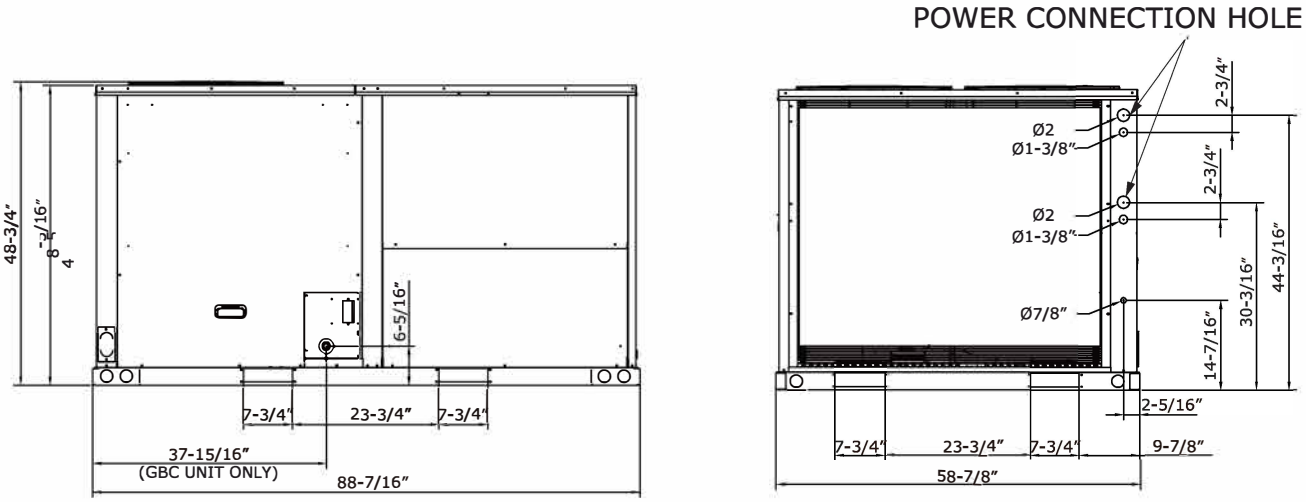

Figure 4. Gas/electric units — bottom view (in inches)

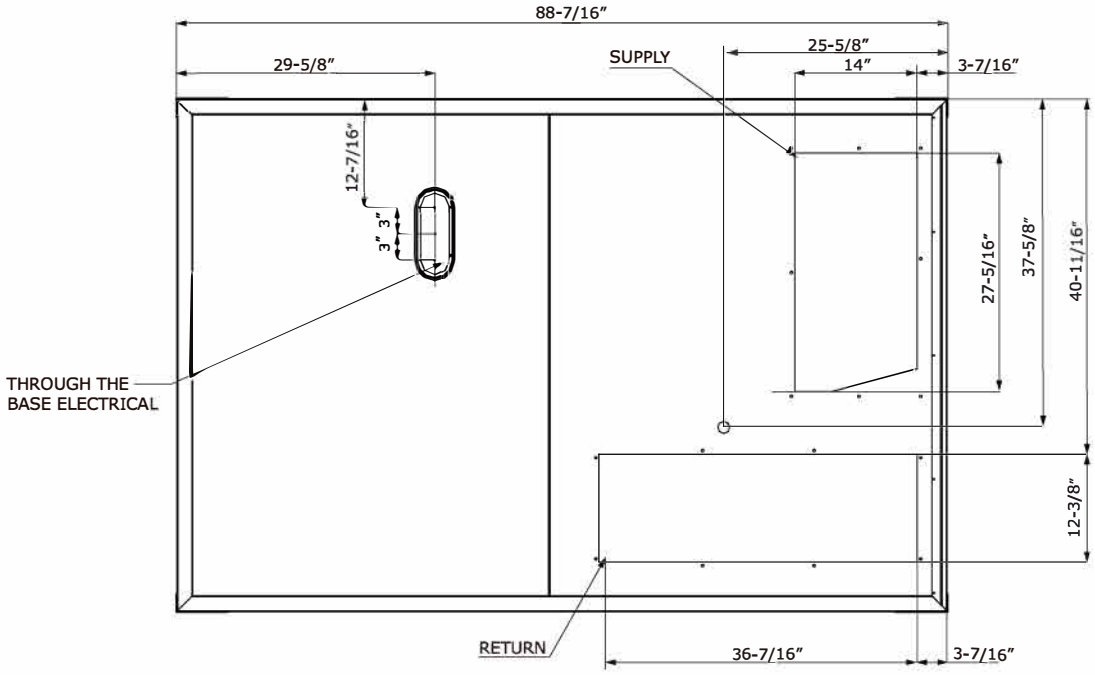

NOTES:
1.THROUGH THE BASE GAS AND ELECTRICAL IS NOT STANDARD ON ALL UNITS.
2.VERIFY WEIGHT, CONNECTION, AND ALL DIMENSION WITH INSTALLER DOCUMENTS BEFORE INSTALLATION.

Figure 5. Foundation units — back view (horizontal configuration) (in inches)

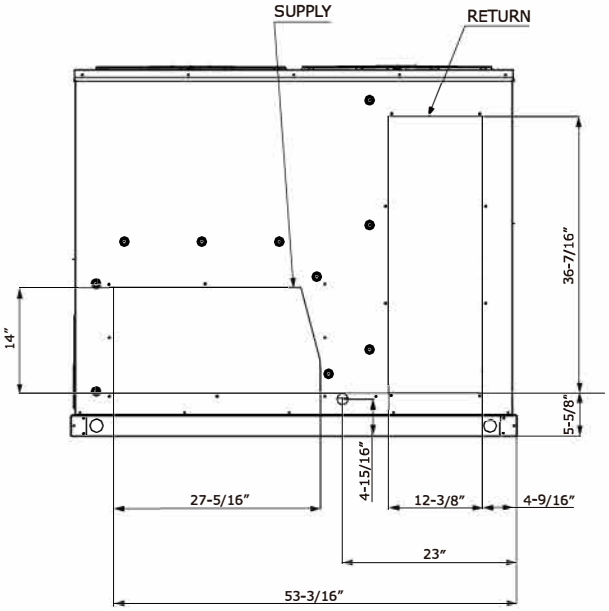

Figure 6. Roof curb (in inches)

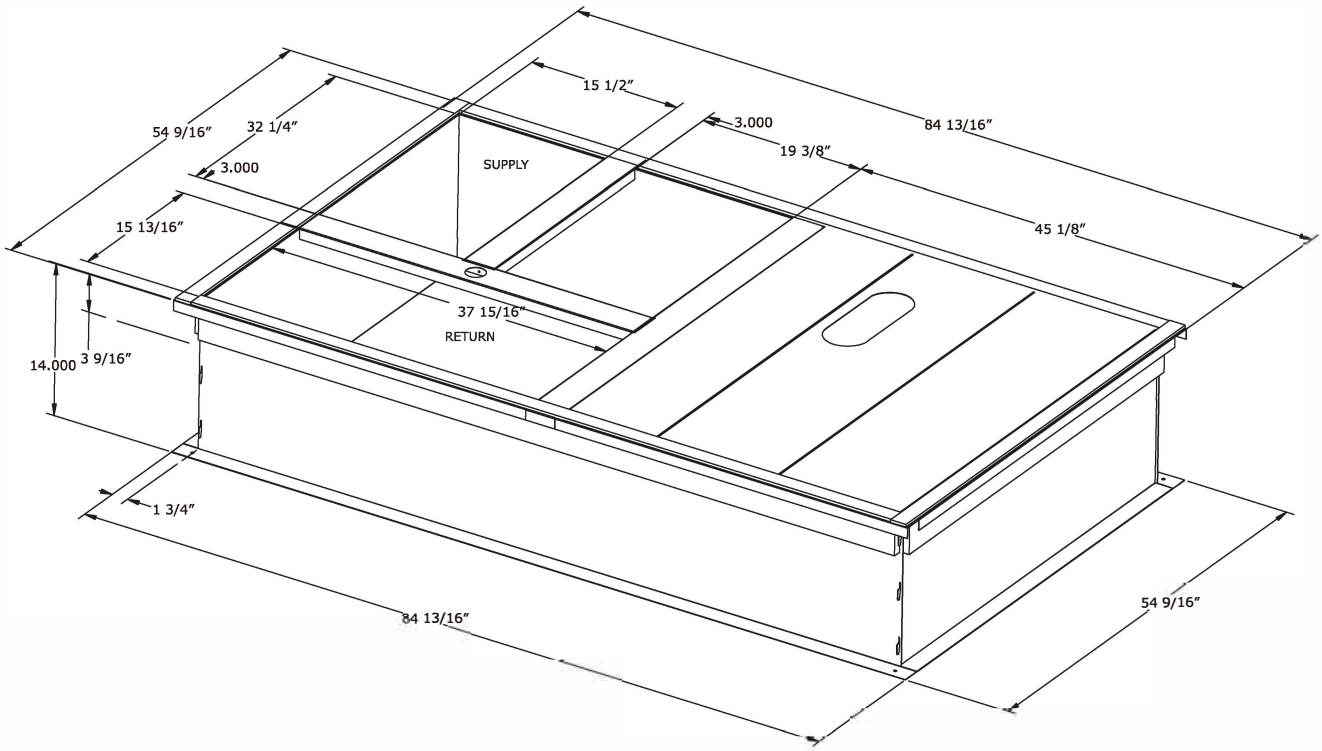

Figure 7. Downflow unit clearance (in inches)

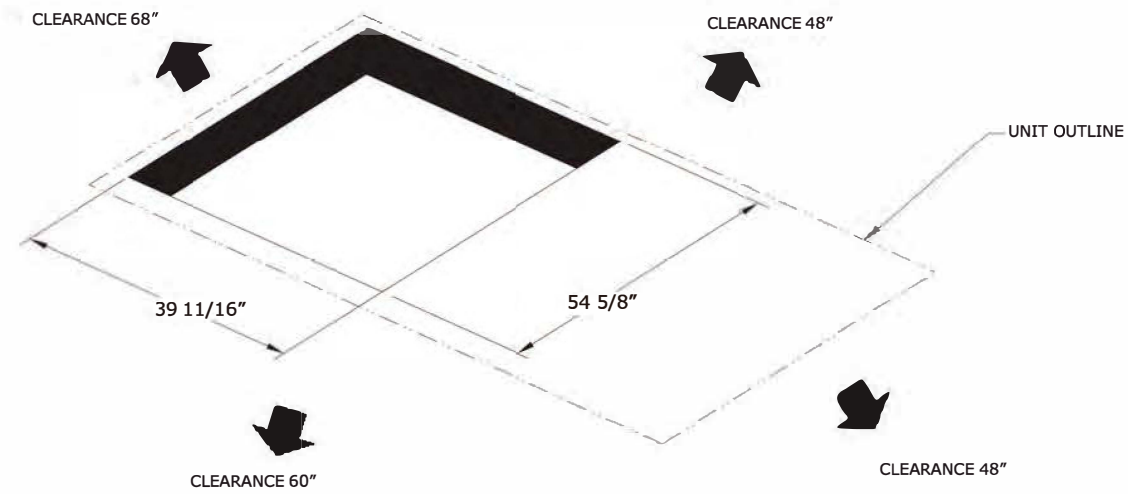

Weights

Table 1. Maximum unit and corner weights (lb) and center of gravity dimensions (in.)

Voltage	Tons	Weights (lb)[a], [b]		Corner Weights[c]				Center of Gravity (in.)	
		Shipping	Net	A	B	C	D	Length	Width
208/230V&460V	7.5	1087	1025	247	246	265	267	44	33
	8.5	1124	1063	254	246	275	287	43	35
	10	1157	1096	289	242	257	317	38	33
	12.5	1237	1175	306	257	278	344	38	34
	7.5	979	917	221	220	237	238	44	33
	8.5	1016	955	228	221	247	258	43	35
	10	1047	985	260	217	231	284	38	33
	12.5	1127	1065	277	233	252	311	38	34
575V	7.5	1136	1074	255	254	278	286	42	35
	8.5	1173	1112	268	256	288	298	41	37
	10	1207	1145	298	250	268	328	36	35
	12.5	1297	1235	318	267	289	359	36	36

(a) Weights are approximate. Horizontal and downflow unit and corner weights may vary slightly.
(b) Weights do not include additional factory or field installed options/accessories.
(c) Corner weights are given for information only. 7.5–12.5 ton models mstube supported continuously by a curb or equivalent frame support.

Figure 8. Corner weights

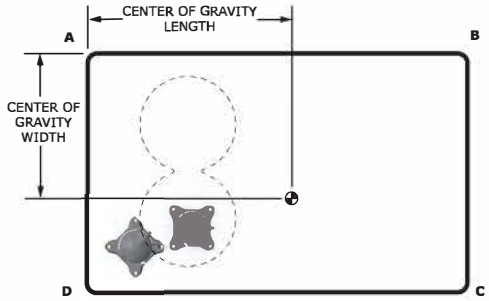

Rigging

⚠ WARNING

Heavy Object!

Failure to follow instructions below could result in unit dropping which could result in death or serious injury, and equipment or property-only damage.

Ensure that all the lifting equipment used is properly rated for the weight of the unit being lifted. Each of the cables (chains or slings), hooks, and shackles used to lift the unit must be capable of supporting the entire weight of the unit. Lifting cables (chains or slings) may not be of the same length. Adjust as necessary for even unit lift.

⚠ WARNING

Improper Unit Lift!

Failure to properly lift unit in a LEVEL position could result in unit dropping and possibly crushing operator/technician which could result in death or serious injury, and equipment or property-only damage.

Test lift unit approximately 24 inches (61 cm) to verify proper center of gravity lift point. To avoid dropping of unit, reposition lifting point if unit is not level.

Figure 9. Rigging and center of gravity data

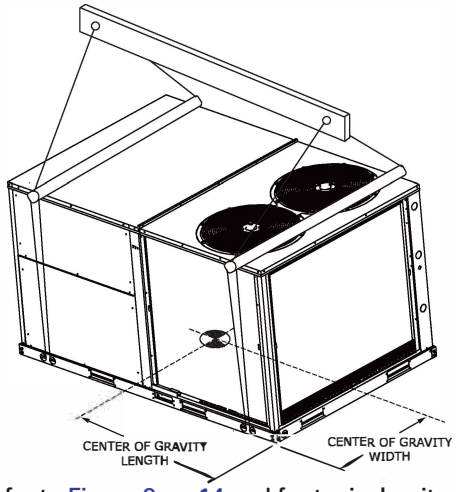

Refer to Figure 9, p. 14 and for typical unit operating weights rigging before proceeding.

1. Remove the shipping crate from around the unit. Do not remove the crating from the top of the unit.
2. Rig the unit as shown in Figure 9, p. 14. Attach adequate strength lifting slings to all four lifting brackets in the unit base rail. Do not use cables, chains, or slings except as shown.
3. Install a lifting bar, as shown in Figure 9, p. 14, to protect the unit and to facilitate a uniform lift. The minimum distance between the lifting hook and the top of the unit should be 7 feet.
4. Test-lift the unit to ensure it is properly rigged and balanced, make any necessary rigging adjustments.
5. Lift the unit and position it into place.
6. Downflow units;alignthebaserailoftheunitwith the curb rail while lowering the unit onto the curb. Make sure that the gasket on the curb is not damaged while positioning the unit.

Installation

Unit Foundation

⚠ WARNING

Risk of Roof Collapsing!

Failure to ensure proper structural roof support could cause the roof to collapse, which could result in death or serious injury and property damage.
Confirm with a structural engineer that the roof structure is strong enough to support the combined weight of the roofcurb, the unit, and any accessories.

NOTICE

Water Damage!

Failure to follow instructions below could result in equipment and property damage.
Non-factory penetrations through the base of this unit are not allowed. Any penetration in the base of the unit may affect the water tight integrity of the unit and lead to water leaks into the conditioned space.

Notes:

- *For units with optional Condensate Overflow Switch (COF) accessory kit, the switch will not work properly if unit is not level or slightly sloped toward switch.*
- *To assure proper condensate flow during operation the unit and the curb must be level.*

If the unit is installed at ground level, elevate it above the snow line. Provide concrete footings at each support location with a "full perimeter" support structure or a slab foundation for support. Refer to for the unit's operating and point loading weights when constructing a footing foundation.

If anchoring is required, anchor the unit to the slab using hold down bolts or isolators. Isolators should be installed to minimize the transmission of vibrations into the building.

For rooftop applications, if anchoring is required, anchor the unit to the roof with hold-down bolts or isolators.

Check with a roofing contractor for proper waterproofing procedures.

Use only with type of gas approved for this furnace. Refer to the furnace rating plate.

Install this furnace only in a location and position as specified in page 16、19、22、23 of these instructions.

Provide adequate combustion and ventilation air to the furnace space as specified in page 20 of these instructions.

Ductwork

Elbows with turning vanes or splitters are recommended to minimize air noise due to turbulence and to reduce static pressure.

When attaching the ductwork to the unit, provide a watertight flexible connector at the unit to prevent operating sounds from transmitting through the ductwork.

All outdoor ductwork between the unit and the structure should be weather proofed after installation is completed.

Note: *For sound consideration, cut only the holes in the roof deck for the ductwork penetrations. Do not cut out the entire roof deck within the curb perimeter.*

If a Curb Accessory Kit is not used:

1. The ductwork can be attached directly to the factory-provided flanges around the unit's supply and return air openings. Be sure to use flexible duct connections at the unit.
2. For "built-up" curbs supplied by others, gaskets must be installed around the curb perimeter flange and the supply and return air opening flanges.

General Unit Requirements

⚠ WARNING

PERSONAL INJURY / PROPERTY DAMAGE HAZARD

Exposing combustible (non-metal) material to the supply opening of a downflow unit can cause a fire resulting in property damage, personal injury or death.
The first 6 inches of supply air plenum and ductwork must be constructed of sheet metal as required by NFPA 90B. The supply air plenum or duct must have a solid sheet metal bottom directly under the unit with no openings, registers or flexible air ducts located in it. If flexible supply air ducts are used, they may be located only in the vertical walls of rectangular plenum, a minimum of 6 inches from the solid bottom. Metal plenum or duct may be connected to the combustible floor base; if not, it must be connected to the unit supply duct exposed to the supply air opening from the downflow unit.

The checklist listed below is a summary of the steps required to successfully install a commercial unit. This checklist is intended to acquaint the installing personnel with what is required in the installation process. It does not replace the detailed instructions called out in the applicable sections of this manual.

- ☐ Check the unit for shipping damage and material shortage; file a freight claim and notify appropriate sales representative.
- ☐ Verify correct model, options and voltage from nameplate.
- ☐ Verify that the installation location of the unit will provide the required clearance for proper operation.
- ☐ Assemble and install the roof curb (if applicable). Refer to the latest edition of the curb installers guide that ships with each curb kit.
- ☐ Fabricate and install ductwork; secure ductwork to curb.
- ☐ Rigging the unit.
- ☐ Set the unit onto the curb; check for levelness.
- ☐ Ensure unit-to-curb seal is tight and without buckles or cracks.
- ☐ Install and connect a condensate drain line to the evaporator drain connection.

Main Electrical Power Requirements

- ☐ Verify that the power supply complies with the unit nameplate specifications.
- ☐ Inspect all control panel components; tighten any loose connections.
- ☐ Connect properly sized and protected power supply wiring to a field-supplied/ installed disconnect switch and to the main power terminal block in the unit control panel.
- ☐ Install proper grounding wires to an earth ground.

Note: *All field-installed wiring must comply with NEC and applicable local codes.*

⚠ WARNING

ELECTROCUTION HAZARD

Disconnect all power to unit before installing or servicing. More than one disconnect switch may be required to de-energize the equipment.
Hazardous voltage can cause severe personal injury or death.

External Vent Hood Installation

1. Remove and discard the cover plate located on the gas heat panel.

   Important:

   - *Make sure you read the label located on the cover plate before you discard it.*
   - *Do not discard the fastening screws! They will be needed to install the vent hood.*

Figure 10. Vent hood installation

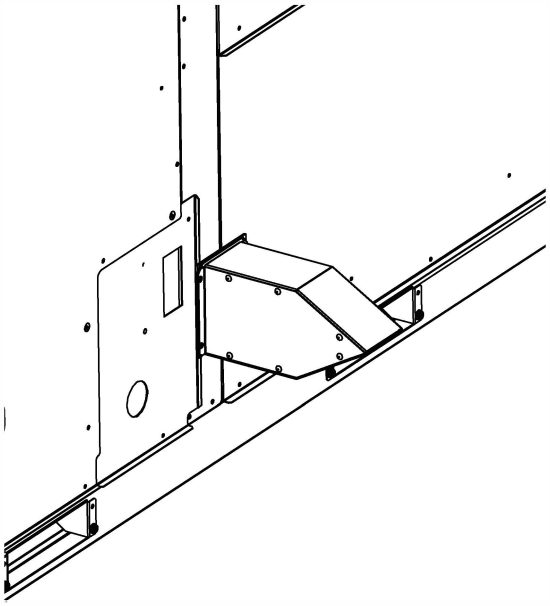

Vent hood in the picture is for reference,please make the object as the standard. And it has the function of preventing rain and foreign bodies, and should not be changed without consultation.

Condensate Drain Configuration

An evaporator condensate drain connection is provided on each unit. Refer to "Dimensional Data," p. 10 for the appropriate drain location.

Note: *Use 1-inch PVC pipe to connect to the drain pan outlet provided in the unit. This is a slip fit joint (no threads). Do not use PVC glue to connect condensate drain, thread sealing compound or Teflon tape may be used.*

A condensate trap must be installed at the unit due to the drain connection being on the "negative pressure" side of the fan.

A condensate drain line must be connected to the P-Trap. Pitch the drain lines at least 0.5-inch for every 10 feet of horizontal run to assure proper condensate flow. Do not allow the horizontal run to sag causing a possible doubletrap condition which could result in condensate backup due to "air lock".

Filter Installation

Each unit ships with 2-inch filters installed. The quantity of filters is determined by unit size. Access to the filters is obtained by removing the filter access panel.

Note: *Do not operate the unit without filters.*

Field Installed Power Wiring

An overall dimensional layout for the standard field installed wiring entrance into the unit is illustrated in "Dimensional Data," p. 10. To insure the unit's supply power wiring is properly sized and installed, follow the guidelines outlined below.

Note: *All field installed wiring must conform to NEC guidelines as well as state and Local codes.*

Verify that the power supply available is compatible with the unit's nameplate ratings. The available supply power must be within 10 percent of the rated voltage stamped on the nameplate. Use only copper conductors to connect the power supply to the unit.

⚠ WARNING

ELECTRICAL OPERATION HAZARD

Failure to follow this warning could result in personal injury or death.
Before installing or servicing the unit, always turn off all power to unit.
There may be more than one disconnect switch. Turn off accessory heater power if applicable. Lock out and tag switch with a suitable warning label.

Important: *A field supplied disconnect switch must be installed at or near the unit in accordance with the National Electrical Code (NEC latest edition).*

Main Unit Power

⚠ WARNING

Proper Field Wiring and Grounding Required!

Failure to follow code could result in death or serious injury.
All field wiring MUST be performed by qualified personnel. Improperly installed and grounded field wiring poses FIRE and ELECTROCUTION hazards. To avoid these hazards, you MUST follow requirements for field wiring installation and grounding as described in NEC and your local/state/national electrical codes.

Standard Wiring

The electrical service must be protected from over current and short circuit conditions in accordance with NEC requirements.

Protection devices must be sized according to the electrical data on the nameplate.

- A field supplied disconnect switch must be installed at or near the unit in accordance with the National Electrical Code (NEC latest edition).
- Location of the applicable electrical service entrance is illustrated in "Dimensional Data," p. 10. Complete the unit's power wiring connections onto either; the main terminal block inside the unit control panel, or the electric heat terminal block. Refer to the customer connection diagram that shipped with the unit for specific termination points.
- Provide proper grounding for the unit in accordance with local and national codes.

Control Power Transformer

The 24-volt control power transformers are to be used only with the accessories called out in this manual.

Controls using 24 Vac

Before installing any connecting wiring, refer to "Dimensional Data," p. 10 for the electrical access locations provided on the unit and for AC conductor sizing guidelines.

NOTICE

Use Copper Conductors Only!

Failure to use copper conductors could result in equipment damage as the equipment was not designed or qualified to accept other types of conductors.

1. Use copper conductors unless otherwise specified.
2. Ensure that the AC control wiring between the controls and the unit's termination point does not

exceed three (3) ohms/conductor for the length of the run.

Note: *Resistance in excess of 3 ohms per conductor could cause component failure due to insufficient AC voltage supply.*

3. Be sure to check all loads and conductors for grounds, shorts, and mis-wiring.
4. Do not run the AC low voltage wiring in the same conduit with the high voltage power wiring.

Table 2. Electromechanical thermostat 24V AC conductors with electromechanical unit

Distance from Unit to Control	Recommended Wire Size
0 - 30 feet	22 gauge
0 - 9.1 m	0.33 mm^2
31 - 50 feet	20 gauge
9.5 - 15.2 m	0.50 mm^2
51 - 75 feet	18 gauge
15.5 - 22.9 m	0.75 mm^2
76 - 125 feet	16 gauge
23.1 - 38.1 m	1.3 mm^2
126 - 200 feet	14 gauge
38.4 - 60.9 m	2.0 mm^2

Figure 11. Conventional thermostat field wiring diagram

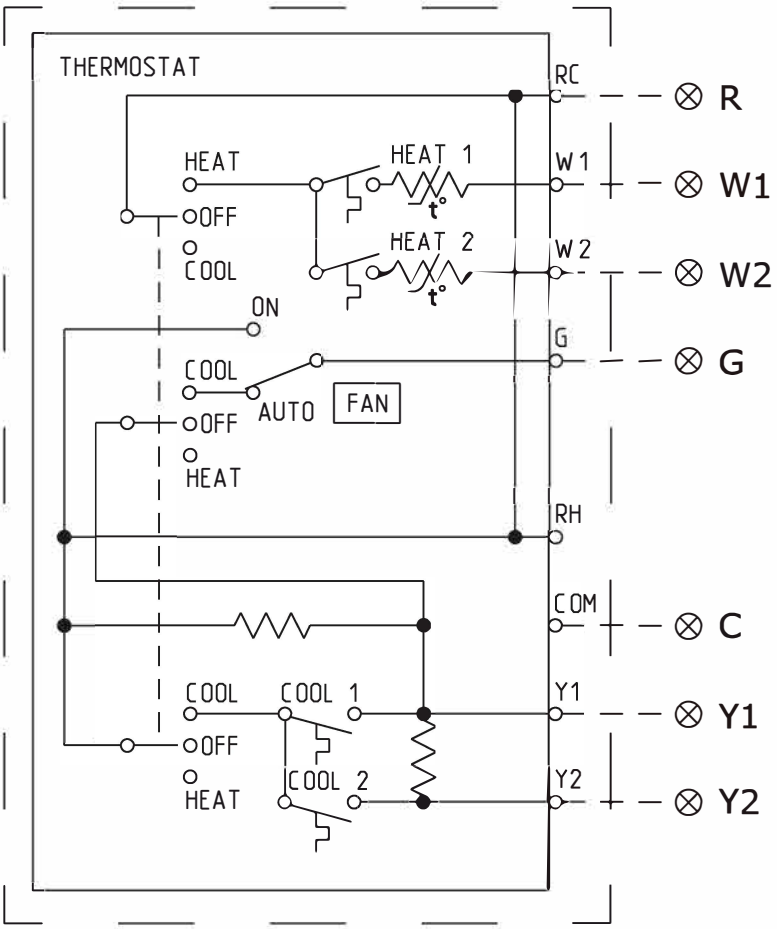

Gas Heat Data

Table 3. Gas heater operating data

Heating Input Rate —Btu/h	125,000	180,000	225,000	250,000
Minimum and Maxmum Inlet Supply Gas Pressure Natural/LP	4.5/11.0	4.5/11.0	4.5/11.0	4.5/11.0
Manifold Gas Pressure[a]	3.5	3.9	3.6	3.5
Combustion Blower Suction Pressure (1st Stage)	-1.3 to -1.7	-1.3 to -1.7	-1.1 to -1.5	-1.1 to -1.5
Combustion Blower Suction Pressure (2nd Stage)	-1.3 to -1.7	-1.3 to -1.7	-1.1 to -1.5	-1.1 to -1.5
Minimum Flame Sensing Current[b]	5.0 Micro Amps DC			
Normal Sensing Current Range	8.0 to 16 Micro Amps DC			
Flue Gas Temperature Rise Above Ambient	230 to 300 F			
Flue Gas Content - % CO_2	7.0% to 8.0% (Natural Gas) 7.5% to 9.0% (Propane)			
Minimum Supply Air Temperature Across Heat Exchanger	40° F			

[a] Staged gas heat units have a positive pressure gas valve. Never adjust the staged gas pressure valve to a negative pressure.
[b] A voltage reading across pens (V+) and (V-) is equatable to the flame sensing current. One volt equals one micro amp.

Table 4. Piping

Length of Pipe (ft)	Iron Pipe Size (IPS) Inches				
	1/2" Pipe	3/4" Pipe	1" Pipe	1¼" Pipe	1½" Pipe
15	76	176	345	750	1220
30	52	120	241	535	850
45	43	99	199	435	700
60	38	86	173	380	610
75	35	77	155	345	545

Note: Capacity of Pipe of Different Diameters and Lengths in Cu. Ft. Per Hr. with Pressure Drop of 0.3" and Specific Gravity of 0.60.

Table 5. Specific gravity multipliers

Specific Gravity	Multipliers
0.50	1.10
0.55	1.04
0.60	1.00
0.65	0.96

Figure 12. Schematic diagram for field gas piping to units

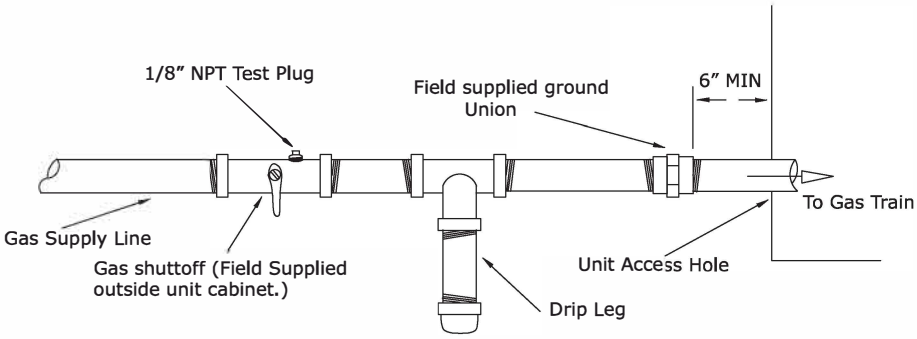

Figure 13. Typical unit gas train configuration

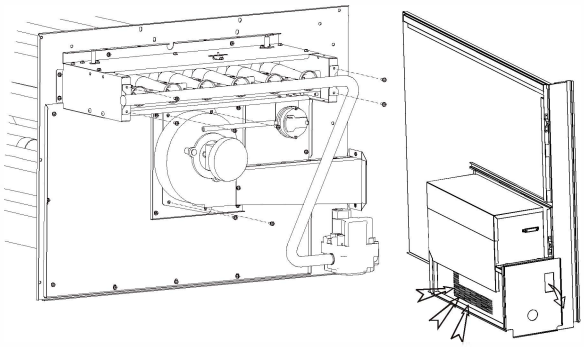

Combustion Airflow Path and Exhaust Path should keep open for heating

Voltage Imbalance

Three phase electrical power to the unit must meet stringent requirements for the unit to operate properly. Measure each leg (phase-to-phase) of the power supply.

Each reading must fall within the utilization range stamped on the unit nameplate. If any of the readings do not fall within the proper tolerances, notify the power company to correct this situation before operating the unit.

Excessive three phase voltage imbalance between phases will cause motors to overheat and eventually fail.

The maximum allowable voltage imbalance is 2 percent. Measure and record the voltage between phases 1, 2, and 3 and calculate the amount of imbalance as follows:

% Voltage Imbalance =

$$\frac{100 \times AV - VD}{AV}$$ where;

AV (Average Voltage) =

$$\frac{Volt\ 1 + Volt\ 2 + Volt\ 3}{3}$$

- V1, V2, V3 = Line Voltage Readings
- VD = Line Voltage reading that deviates the farthest from the average voltage.

Example: If the voltage readings of the supply power measured 221, 230, and 227, the average volts would be:

$$\frac{221 + 230 + 227}{3} = 226 \text{ Avg.}$$

- VD (reading farthest from average) = 221
- The percentage of Imbalance equals:

$$\frac{100 \times 226 - 221}{226} = 2.2\%$$

The 2.2 percent imbalance in this example exceeds the maximum allowable imbalance of 2.0 percent. This much imbalance between phases can equal as much as a 20 percent current imbalance with a resulting increase in motor winding temperatures that will decrease motor life.

If the voltage imbalance is over 2 percent, notify the proper agencies to correct the voltage problem before operating this equipment.

Electrical Phasing (Three Phase Motors)

The compressor motor(s) and the supply fan motor are internally connected for the proper rotation when the incoming power supply is phased as A, B, C.

Proper electrical supply phasing can be quickly determined and corrected before starting the unit by using an instrument such as an Associated Research Model 45 Phase Sequence Indicator and following the steps below:

⚠ WARNING

Hazardous Voltage!

Failure to disconnect power before installing or servicing could result in death or serious injury. Disconnect all electric power, including remote disconnects before servicing. Follow proper lockout/tagout procedures to ensure the power can not be inadvertently energized. Verify that no power is present with a voltmeter.

1. Turn the field supplied disconnect switch that provides power to the main power terminal block or to the “Line” side of the optional factory mounted disconnect switch to the “Off” position.
2. Connect the phase sequence indicator leads to the terminal block or to the “Line” side of the optional factory mounted disconnect switch as follows:
   - Black (phase A) to L1
   - Brown (phase B) to L2
   - Gray (phase C) to L3
3. Close the field supplied main power disconnect switch or circuit protector switch that provides the supply power to the unit.

⚠ WARNING

Live Electrical Components!

Failure to follow all electrical safety precautions when exposed to live electrical components could result in death or serious injury.

When it is necessary to work with live electrical components, have a qualified licensed electrician or other individual who has been properly trained in handling live electrical components perform these tasks.

4. Observe the ABC and CBA phase indicator lights on the face of the sequencer. The ABC indicator light will glow if the phase is ABC. If the CBA indicator light glows, open the disconnect switch or circuit protection switch and reverse any two power wires.
5. Restore the main electrical power and recheck the phasing. If the phasing is correct, open the disconnect switch or circuit protection switch and remove the phase sequence indicator.

Checklist

Use the following checklist in conjunction with the general checklist ("General Unit Requirements," p. 15) to ensure that the unit is properly installed and ready for operation.

⚠ WARNING

Hazardous Voltage!

Failure to disconnect power before installing or servicing could result in death or serious injury. Disconnect all electric power, including remote disconnects before servicing. Follow proper lockout/tagout procedures to ensure the power can not be inadvertently energized. Verify that no power is present with a voltmeter.

- ☐ Check all electrical connections for tightness and "point of termination" accuracy.
- ☐ Verify that the condenser airflow is unobstructed.
- ☐ Verify that the condenser fan and indoor blower turn freely without rubbing and are properly tightened on the shafts.
- ☐ Check the supply fan belts for proper tension and the fan bearings for sufficient lubrication except exhaust gas fan. If the belts require adjustment, or if the bearings need lubricating, refer to the maintenance section of this manual for instructions.
- ☐ Verify that a condensate trap is installed and the piping is properly sized and pitched.
- ☐ Verify that the correct size and number of filters are in place.
- ☐ Inspect the interior of the unit for tools and debris and install all panels in preparation for starting the unit.

External Unit Power Supply

Unit Disconnect Wiring Plan

⚠ WARNING

Proper Field Wiring and Grounding Required!

Failure to follow code could result in death or serious injury.
All field wiring MUST be performed by qualified personnel. Improperly installed and grounded field wiring poses FIRE and ELECTROCUTION hazards. To avoid these hazards, you MUST follow requirements for field wiring installation and grounding as described in NEC and your local/state/national electrical codes.

Important: *All phases of this installation must comply with NATIONAL, STATE, and LOCAL CODES. In addition to local codes, the installation must comply with National Electric Code - ANSI/NFPA NO. 70 LATEST REVISION.*

1. Field connections are made by first removing the compressor access panel on the front of the unit. Unscrew the assembly around the outside of the disconnect switch. This assembly is located in the condenser section of the unit.

   Both high and low voltage power can be routed through the base or through the front corner post where the disconnect enclosure is mounted. The hole is sized for 1 1/2–in. conduit.
2. If the conduit required for your application is larger than 1 1/2–in., remove the termination plate and connect to the larger hole using field supplied reducing washers.
3. Route the power wires and ground conductor through conduit and into the bottom of a field-installed disconnect switch. Connect the power conductors to the lugs provided. Connect the ground wire to the unit ground lug.

   Note: *Wire size for the length of run should be determined using the circuit ampacity found on the unit nameplate and the N.E.C.*
4. Route low voltage (class II), control wiring through hole in base of unit but not through high voltage conduit. Feed control wiring through bushing provided on side panel. Route wires through loose wire ties provided.
5. Tighten the wire ties. Secure the excess wire bundle under the wire ties in the outdoor section. Do not leave excess wire in the electrical enclosure. Use the unit wiring diagram to make the low voltage connections.

Through the Base Gas Utility Option

This section contains the instructions for making field connections to the Through the Base Gas Utility Option.

Field Installed Connections

⚠ WARNING

Hazardous Voltage w/Capacitors!

Failure to disconnect power and discharge capacitors before servicing could result in death or serious injury.

Disconnect all electric power, including remote disconnects and discharge all motor start/run capacitors before servicing. Follow proper lockout/ tagout procedures to ensure the power cannot be inadvertently energized. Verify with a CAT III or IV voltmeter rated per NFPA 70E that all capacitors have discharged.

For additional information regarding the safe discharge of capacitors, see PROD-SVB06*-EN.

⚠ WARNING

Proper Field Wiring and Grounding Required!

Failure to follow code could result in death or serious injury.

All field wiring MUST be performed by qualified personnel. Improperly installed and grounded field wiring poses FIRE and ELECTROCUTION hazards. To avoid these hazards, you MUST follow requirements for field wiring installation and grounding as described in NEC and your local/ state/national electrical codes.

Important: *All phases of this installation must comply with NATIONAL, STATE, and LOCAL CODES. In absence oflocal codes, the installation must conform with ANSI Z223.1 /NFPA 54, and/or the Natural Gas and Propane Installation Code, CSA B149.1.*

1. Field connections are made by first removing the access panel for the heat section on the front of the unit.
2. The gas piping assembly ships inside this section and includes the shut-off valve, a pressure tap for testing, and the necessary unions for field connection. For through the base access, remove the factory-provided cap from the base pan opening. See Figure 14, p. 22.
3. Route field piping through this hole to the dimension shown in Table 6, p. 22.
4. Place the assembly through the cabinet opening as shown in Figure 14, p. 22 and make the union connection to the field piping and to the gas train. Refer to the "Heating Operation (for Gas Units) - Standard Economizer," p. 26 for startup instructions.

Table 6. Through the base gas piping dimension

Model	Dimension
7.5 Tons-12.5 Tons	1 3/16–in.

Figure 14. Through the base gas piping installation

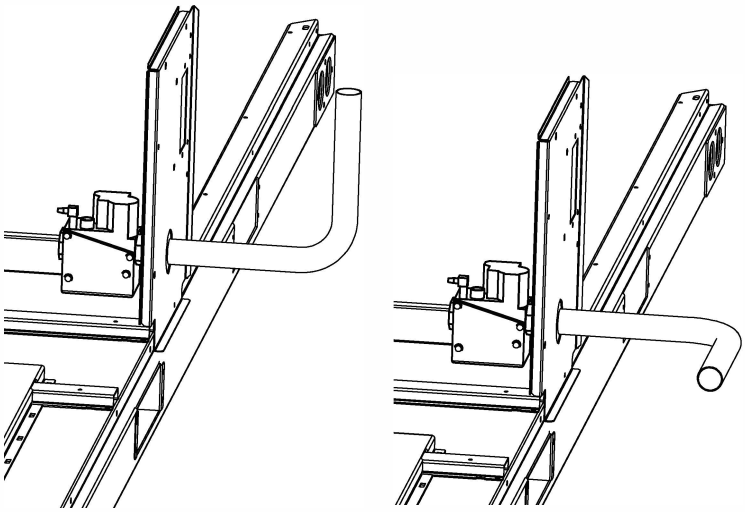

Flue gas temperature is high, shall avoid high temperature flue gas directly blowing to the gas pipelines when installing gas pipelines.

Refrigerant Sensor

⚠ WARNING

PERSONAL INJURY OR PROPERTY DAMAGE HAZARD

Failure to follow proper R-454B mitigation system installation instructions can result in property damage, personal injury, or death.
If any fault codes are listed, please troubleshoot to prevent system malfunction.

⚠ CAUTION

When the refrigerant sensor detects a refrigerant leak, the device will shut down the compressor, external motor, electric auxiliary heat or gas heating, and start the internal fan to run at the highest speed, and the digital tube displays X.PL.

When the main control cannot communicate with the refrigerant sensor, the device will shut down the compressor, external motor, electric auxiliary heat or gas heating, and start the internal fan to run at the highest speed, and the digital tube displays X.Ed.

When the main control reads the life fault information of the refrigerant sensor, the device will shut down the compressor, external motor, electric auxiliary heat or gas heating, and start the internal fan to run at the highest speed, and the digital tube displays X.EH. In this case, you need to replace a correct sensor in time.

When the main control reads that the refrigerant sensor has other fault information, the device will shut down the compressor, external motor, electric auxiliary heat or gas heating, and start the internal fan to run at the highest speed, and the digital tube displays X.EL.

X is 1/2, 1 represents the inside sensor, 2 represents the outside sensor.

⚠ WARNING

Unit must be powered except for service. Continuous air circulation required for proper functioning. Unit must be powered except for service. This unit is equipped with electrically powered safety measures. To be effective, the unit must be electrically powered at all times after installation, other than when servicing.

⚠ CAUTION

The refrigerant leakage sensor can only use the factory model or the specified model indicated in the corresponding manual.

The R454B refrigerant leakage sensor must be used to activate the refrigerant shut-off device, the alarm device, incorporated circulation airflow or other emergency controls, which shall give an electrical signal at a predetermined alarm set point in response to leaked refrigerant.

The installation of the refrigerant leakage sensor shall allow access for checking, repair or replacement by an authorized person.

The refrigerant leakage sensor shall be installed so its function can be verified easily.

The refrigerant leakage sensor shall be protected to prevent tampering or unauthorized resetting of the pre-set value.

To be effective, the refrigerant leakage sensor must be electrically powered at all times after installation, other than when servicing.

The service life of the refrigerant sensor is 15 years, and it should be replaced after the service life or if the sensor is determined to be faulty during the service life.

⚠ CAUTION

If the refrigerant leakage sensor detects a refrigerant leak, the fan will be turned on to the maximum, the compressor will stop running. You should immediately leave the leak area and notify a professional for handling.

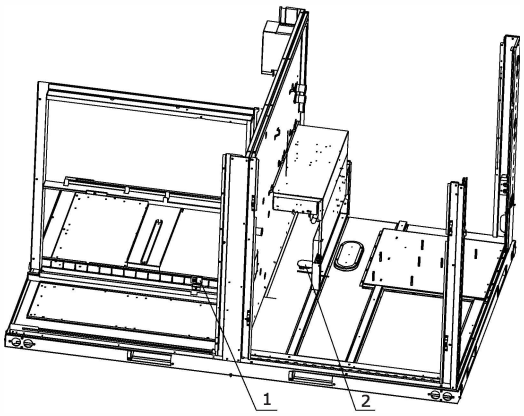

Figure15. Refrigerant sensor installation position (1 is inside, 2 is outside)

Pre Start

Verifying Proper Air Flow (Units with Belt Drive Indoor Fan)

Much of the systems performance and reliability is closely associated with, and dependent upon having the proper airflow supplied both to the space that is being conditioned and across the evaporator coil.

The indoor fan speed is changed by opening or closing the adjustable motor sheave.

Before starting the SERVICE TEST, set the minimum position setpoint for the economizer to 0% using the setpoint potentiometer located on the Economizer Control (ECA), if applicable.

⚠ WARNING

FIRE OR EXPLOSION HAZARD

Failure to follow the safety warnings exactly could result in serious injury, death or property damage.

Never test for gas leaks with an open flame. Use a commercially available soap solution made specifically for the detection of leaks to check all connections. A fire or explosion may result causing property damage, personal injury or loss of life.

Electromechanical Controls – Test Procedure

Fan Test and Minimum Ventilation. Connect the short circuit between R and G.

Connect the short circuit between R and Y1.

Cool 1. Connect the short circuit between R and Y1.

Cool 2. Connect the short circuit between R and Y2.

Heat 1. Connect the short circuit between R and W1.

Heat 2. Connect the short circuit between R and W2.

Table 7. Air flow

	Airflow (CFM)	ESP (in.H_2O)	0.1	0.2	0.3	0.4	0.5	0.6	0.7	0.8	0.9	1	1.1	1.2	1.3	1.4	1.5	1.6	1.7	1.8	1.9	2
7.5 Ton	2400	Power (BHP)	--	0.85	0.93	1.00	1.12	1.19	1.27	1.36	1.46	1.52	1.59	1.66	1.76	1.94	2.05	2.15	2.27	2.37	2.48	2.58
	2700		0.96	0.99	1.13	1.17	1.27	1.35	1.44	1.55	1.63	1.71	1.77	1.93	2.03	2.15	2.26	2.38	2.49	2.60	2.69	2.80
	3000		1.11	1.26	1.32	1.40	1.50	1.60	1.73	1.71	1.94	1.96	2.03	2.14	2.25	2.37	2.47	2.58	2.69	2.79	2.90	3.01
	3300		1.32	1.39	1.55	1.57	1.68	1.82	1.85	1.88	1.90	2.08	2.34	2.47	2.59	2.70	2.81	2.90	3.02	--	--	--
8.5 Ton	2700	Power (BHP)	0.96	0.99	1.13	1.17	1.23	1.28	1.28	1.27	1.37	1.50	1.82	2.07	2.15	2.27	2.40	2.52	2.64	2.77	2.89	3.00
	3050		1.17	1.26	1.20	1.36	1.34	1.45	1.55	1.58	1.73	1.75	2.19	2.33	2.43	2.54	2.66	2.76	2.84	2.93	3.01	3.08
	3400		1.32	1.41	1.47	1.59	1.62	1.75	1.78	1.94	2.02	2.06	2.59	2.70	2.80	2.89	2.99	3.08	3.17	3.24	3.32	3.42
	3750		1.65	1.64	1.76	1.90	1.94	2.11	2.12	2.26	2.30	2.51	2.99	3.09	3.19	3.29	3.39	3.47	3.57	3.65	3.75	3.81
10 Ton	3200	Power (BHP)	--	1.25	1.37	1.47	1.46	1.60	1.59	1.75	1.78	1.80	1.89	1.94	2.11	2.28	2.35	2.43	2.53	2.64	2.68	2.73
	3600		1.50	1.64	1.71	1.83	1.73	1.91	1.95	1.98	2.20	2.24	2.39	2.49	2.58	2.67	2.78	2.89	2.95	3.00	3.17	3.34
	4000		1.84	1.98	2.01	2.07	2.21	2.30	2.36	2.55	2.63	2.70	2.80	2.88	3.00	3.11	3.19	3.27	3.43	3.59	3.74	3.86
	4400		2.16	2.34	2.38	2.45	2.67	2.73	2.80	2.88	3.08	3.20	3.42	3.50	3.57	3.49	3.66	3.85	3.99	4.14	4.30	4.43
12.5 Ton	4000	Power (BHP)	1.80	1.89	2.06	2.12	2.26	2.35	2.41	2.61	2.69	2.76	2.80	2.88	3.00	3.11	3.19	3.27	3.43	3.59	3.74	3.86
	4500		2.30	2.46	5.69	2.61	2.81	2.89	2.97	3.03	3.08	3.38	3.60	3.68	3.85	3.75	3.93	4.11	4.28	4.44	4.61	4.77
	5000		2.87	3.08	3.34	3.41	3.46	3.77	3.96	4.08	4.25	4.43	4.63	4.49	4.67	4.83	4.99	4.89	5.11	--	--	--
	5500		3.86	3.97	4.07	4.34	4.49	4.65	4.83	5.01	2.27	5.54	5.48	5.69	5.55	5.71	--	--	--	--	--	--

Standard Motor

High Motor

Start Up

Electromechanical Controls - Sequence Of Operation

These units are offered with electromechanical controls.

Cooling without an Economizer

When the thermostat switch is set to the "Cool" position and the zone temperature rises above the cooling setpoint, the thermostat Y contacts close. The compressor contactor (CC1) coil is energized provided the low pressure control (LPC1), high pressure control (HPC1) are closed. When the (CC1) contacts close, compressor (CPR1) and both outdoor fan motors (ODM1 and ODM2) start. If the first stage of cooling cannot satisfy the cooling requirement, the thermostat closes Y2. The compressor contactor (CC2) coil is energized provided the low pressure control (LPC2), high pressure control (HPC2) are closed.

When the (CC2) contacts close, compressor (CPR2) starts.

Evaporator Fan Operation (for Gas Units) - Standard Economizer

Economizer is a field installed accessory. Refer to the following economizer information when the accessory kit is installed.

When the thermostat fan selection switch is set to the "Auto" position, the Ignition Module (IGN) energizes the indoor fan relay (F) approximately 1 second after energizing the compressor contactor coil (CC1) in the cooling mode. In the heating mode, the Ignition Module (IGN) energizes the indoor fan relay (F) coil approximately 45 second after gas ignition. Closing indoor fan relay (F) coil starts the indoor fan motor (IDM). The (IGN) de-energizes the fan relay (F) approximately 80 seconds after the cooling requirement has been satisfied to enhance unit efficiency.

When the heating cycle is terminated, the indoor fan relay (F) coil is de-energized approximately 90 seconds after the heating requirement.

When the thermostat fan selection switch is set to the "On" position, the (IGN) keeps the indoor fan relay coil (F) energized for continuous fan motor operation.

Evaporator Fan Operation (for Cooling Only Units) - Standard Economizer

When the thermostat fan selection switch is set to the "Auto" position, the thermostat energizes the indoor fan relay coil (F) to start the indoor fan motor (IDM).The fan relay (F) de-energizes after the cooling requirement has been satisfied. When the heating cycle is terminated, the indoor fan relay (F) coil is de-energized with heater contactors.

When the thermostat fan selection switch is set to the "On" position, the thermostat keeps the indoor fan relay coil (F) energized for continuous fan motor operation.

Economizer Set-Up - Standard Economizer

Adjusting the minimum position potentiometer located on the unit economizer module (RTEM-EM) sets the required amount of ventilation air.

Ambient temperature is controlling the economizing cycle by sensing the outside air dry bulb temperature. Table 8, p. 25 lists the selectable dry bulb values by potentiometer setting.

Table 8. Potentiometer settings

Potentiometer Setting	Dry Bulb	Enthalpy
A	27 Btu/lb (63 kJ/kg)	73°F (22.8°C)
B	25 Btu/lb (58 kJ/kg)	70°F (21.1°C)
C[a]	23 Btu/lb (53 kJ/kg)	67°F (19.4°C)
D	22 Btu/lb (51 kJ/kg)	63°F (17.2°C)
E	19 Btu/lb (44 kJ/kg)	55°F (12.8°C)

[a] Factory setting

Cooling with an Economizer - Standard Economizer

The economizer is utilized to control the zone temperature providing the outside air conditions are suitable. Outside air is drawn into the unit through modulating dampers.

When cooling is required and economizing is possible, the unit economizer module (RTEM-EM) opens the economizer damper. The RTEM-EM continues to modulate the economizer damper open/closed to keep the mixed air temperature in the 50°F to 55°F range.

The thermostat will close the Y2 contacts to turn on contactor (CC1) if mechanical cooling is required.

If economizing is not possible, the RTEM-EM drives the damper to the minimum position setpoint when the indoor fan relay (F) is energized and allows mechanical cooling operation.

Heating Operation (Units with Electric Heat) - Standard Economizer

When the system switch is set to the "Heat" position and the zone temperature falls below the heating

setpoint, the thermostat closesW1 contacts the first stage electric heat contactor (AH or AH and CH) is energized. If the first stage of electric heat cannot satisfy the heating requirement, the thermostat closes W2.

When the W2 contacts close, the second stage electric heat contactor (BH or BH and DH) is energized, if applicable. The thermostat cycles both the first and second stages of heat "On" and "Off" as required to maintain the zone temperature setpoint.

Heating Operation (for Gas Units) - Standard Economizer

When the system switch is set to the "Heat" position and the zone temperature falls below the heating setpoint, the Ignition module (IGN) initiates a heat cycle.

Ignition Module Low, Medium and High Heat

Two-stage (IGN) runs self-check (including verification that the gas valve is de-energized). (IGN) checks the high-limit switches (TC01 and TC01) for normally closed contacts, the pressure switch (PS) for normally open contacts, and the flame rollout (FR) switch for continuity. (IGN) energizes inducer blower on high speed to check pressure switch closure. If the pressure switch is closed, the inducer blower starts a 20 second pre-purge (15 seconds on high speed followed by 5 seconds on low speed).

If the pressure switch (PS) is still open, the inducer blower will continue to be energized on high speed until pressure switch closure.

After pre-purge completes, the (IGN) energizes the first stage of the gas valve, initiates spark for 2 seconds minimum, 7 seconds maximum (ignition trial) and detects flame and de-energizes spark. From this point, a fixed 45 second indoor blower delay on timing starts.

After the indoor blower delay on is completed, the (IGN) energizes the indoor blower. The (IGN) enters a normal operating loop where all inputs are continuously monitored. If the first stage of gas heat cannot satisfy the heating requirement, the thermostat closes W2. The (IGN) energizes the second stage of the gas valve and the second stage ofinducer blower.

When the zone thermostat is satisfied, the (IGN) de-energizes the gas valve. The (IGN) senses loss of flame. The (IGN) initiates a 5 second inducer blower post purge and 90 second indoor blower delay off at current speed. The (IGN) de-energizes the inducer blower at the end of the post purge. The (IGN) de-energizes the indoor blower at the end of the selected indoor blower delay off.

Table 9. Ignition module diagnostics

Slow flash	Normal, call for heat.
Two blinks	System lockout (failure to detect or sustain flame)
Three blinks	Pressure switch problem detected.
Four blinks	High limit switch protection device open.
Five blinks	Flame sensed and gas valve not energized or flame sensed and no "W" signal.
Six blinks	Flame rollout switch open.
Seven blinks	switch open (W1 and W2 swapped)

Two-Speed Indoor Fan Control

For units equipped with two-speed indoor fan control, standard unit operation for cooling and heating will continue and all unit functions will operate normally, except for the control of the indoor fan speed. All units configured with any type of heating will heat the supply air and space as normal utilizing full speed indoor fan by energizing the appropriate outputs. The two-speed indoor fan unit will only utilize two speeds during the cooling operation modes described below.

Cooling Operation

For cooling operation, the unit will operate at Low Fan Speed during Fan Only, Economizer Only, and the first stage of compressor unit modes by Default. When the unit receives a call for cooling, if the economizer is enabled, the unit will energize the associated Low Speed output and begin to modulate the OA Damper open above minimum position up to 100% as necessary. By default, the supply fan will remain at low speed for the duration of Economizer-Only cooling. If the supply fan is on when the first stage compressor is energized, it will remain energized or energize at low speed for the duration of Cool 1.

When there is a call for Cool 2, the second compressor is energized and the Supply Fan will switch to High Speed.

The unit will stage down compressors for cooling in reverse order that they were staged and the supply fan will follow the unit mode transitions. Once it is determined through normal cooling control that the second compressor is no longer necessary to meet

cooling demand, the second compressor will be staged back and the supply fan will switch to Low Speed until the unit stages all cooling off or receives a call for Cool 2 again. Once the Supply Fan is no longer requested ON after a Cooling call is cleared, the Supply Fan will remain energized at Low Speed for 60 seconds as on traditional units.

If the economizer is enabled and is being utilized as the first stage of cooling (Y1 active), if the unit receives a Y2 request, the unit will energize the first compressor and will switch the supply fan to high speed until the Y2 request is cleared.

Low Pressure Cutout

The low pressure cutouts are wired in series with the high pressure cutouts and the temperature discharge limits. If this circuit is open before a compressor is started, the compressor in that circuit will not be allowed to operate.

Anytime this circuit is opened, the compressor in that circuit is turned offimmediately.

High Pressure Cutout and Temperature Discharge Limit

The high pressure controls and temperature discharge limit are wired in series between the compressor outputs on the LTB and the compressor contactors. If the high pressure safety or temperature discharge limit opens, the compressor on the affected circuit is turned off.

Heating Operation

Standard unit operation for heating will continue on units equipped with a two-speed indoor fan. During heat mode, all units configured with staged electric or gas heat will heat the supply air and space as normal utilizing full speed indoor fan.

Emergency Stop

This input can be activated by opening a field supplied device.

Compressor Start-Up

1. Attach a set of service gauges onto the suction and discharge gauge ports for each circuit.

   See, "Cooling Operation," p. 26 for startup instructions.

   Scroll Compressors

   a. Once each compressor has started, verify that the rotation is correct. If wired correctly the suction pressure should drop and the discharge pressure should rise. If a scroll compressor is rotating backwards, it will not pump and a loud rattling sound can be observed.

   b. If the electrical phasing is correct, before condemning a compressor, interchange any two leads (at the compressor Terminal block) to check the internal phasing. Refer to the following illustration for the compressor terminal/phase identification. Do not allow the compressor to operate backwards for more than 5 seconds. Operation for a period of time longer than this will result in compressor damage.

Figure 16. Compressor terminal box

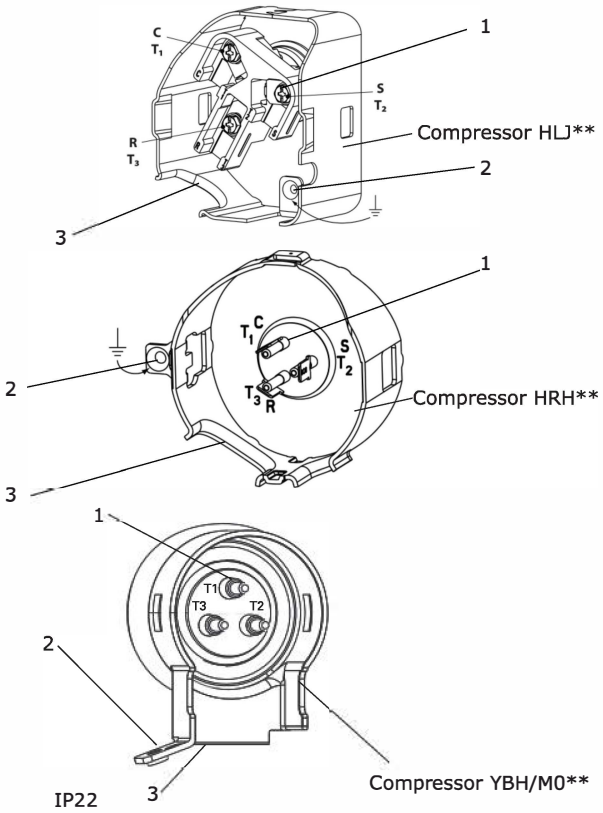

1. Spade connectors 1/4–in.
2. Earth connection
3. Power cable passage

Table 10. Compressor types

Tonnage	208/230 V		460 V		575 V	
	Compressor		Compressor		Compressor	
	1	2	1	2	1	2
7.5	YBH042R	YPH031R	YBH042W	YPH031W	YBH042T	YPH031T
8.5	YBM051R	YBH042R	YBM051W	YBH042W	YBM051T	YBH042T
10	YBM051R	HRH051U2	YBM051W	HRH051U4	YBM051T	HRH051U7
12.5	HLJ072T2	YBM051R	HLJ072T4	YBM051W	HLJ072T7	YBM051T

Table 11. POE Oil recharge amount (fl. oz.)

Tonnage	208/230 V		460 V		575 V	
	Compressor		Compressor		Compressor	
	1	2	1	2	1	2
7.5	43.3	25.0	43.3	25.0	43.3	25.0
8.5	43.3	43.3	43.3	43.3	43.3	43.3
10	43.3	53.1	43.3	53.1	43.3	53.1
12.5	53.1	43.3	53.1	43.3	53.1	43.3

2. After the compressor and condenser fan have started and operated for approximately 30 minutes, observe the operating pressures. Compare the operating pressures to the operating pressure curve.
3. Check system subcooling.
4. Repeat Step 1 through Step 3 for each refrigerant circuit.
5. To stop the SERVICE TEST, turn the main power disconnect switch to the "Off" position or proceed to the next component start-up procedure. Remove electromechanical test mode connections (if applicable).

Heating Start-Up

When starting the unit for the first time or servicing the heaters, it is a good practice to start the heater with the main gas supply turned "Off". Once the ignition system and components have been checked, open the main power disconnect switch to reset the unit.

Final System Set Up

After completing all of the pre-start and startup procedures outlined in the previous sections (i.e., operating the unit in each ofits modes through all available stages of cooling and heating), perform these final checks before leaving the unit:

- ☐ Inspect the unit for misplaced tools, hardware, and debris.
- ☐ Verify that all exterior panels including the control panel doors and condenser grilles are secured in place.
- ☐ Close the main disconnect switch or circuit protector switch that provides the supply power to the unit's terminal block or the unit mounted disconnect switch.

Refrigerant Charge and Room Area Limitations

In UL/CSA 60335-2-40, R454B refrigerant is classified as class A2L, which is mildly flammable. Therefore, using R454B refrigerant will limit the space of the rooms being served by the unit.
Similarly, the total amount of refrigerant in each system shall be less than or equal to the allowable maximum refrigerant charge. The allowable maximum refrigerant charge depends on the space of the rooms being served by the unit.

NOTE: The nouns in the table are explained as follows:
- Mc: the actual refrigerant charge in the system.
- TA: the total area of the conditioned space connected by ducts.
- TAmin: the required minimum area of the total conditioned space connected by ducts.
- Mmax: the allowable maximum refrigerant charge in the system.
- Qmin: the minimum circulation airflow.

Room Area Calculation Requirements

NOTE: The space considered shall be any space which contains refrigerant-containing parts or into which refrigerant could be released.

For appliances serving one or more rooms with an air duct system, the room area calculation shall be determined based on the total area of the conditioned space (TA) connected by ducts taking into consideration that the circulating airflow distributed to all the rooms by the appliance integral indoor fan will mix and dilute the leaking refrigerant before entering any room.

For determination of room area (A) when used to calculate the refrigerant charge limit, the following shall apply. The room area (A) shall be defined as the room area enclosed by the projection to the base of the walls, partitions and doors of the space in which the appliance is installed.

Spaces connected by only drop ceilings, ductwork, or similar connections shall not be considered a single space.
Units mounted higher than 70-55/64 inches and spaces divided by partition walls that are no higher than 62-63/64 inches shall be considered a single space.
Rooms on the same floor and connected by an open passageway between the spaces can be considered a single room when determining compliance to Amin, if the
passageway complies with all of the following.
1) It is a permanent opening.
2) It extends to the floor.
3) It is intended for people to walk through.
The area of the connected rooms, on the same floor,connected by permanent opening in the walls and/or doors between occupied spaces, including gaps between the wall and the floor, can be considered a single room when determining compliance to Amin, provided all of the following conditions are met as Figure 17.

1) Low level opening
①The opening shall not be less than Anvmin in Table 12.
②The area of any openings above 11-13/16 inches from
the floor shall not be considered in determining compliance with Anvmin.
③At least 50% of the opening area of Anvmin shall be below 7-7/8 inches from the floor.
④The bottom of the opening is not more than 3-15/16 inches from the floor.
⑤The opening is a permanent opening that cannot be closed.
⑥For openings extending to the floor the height shall not be less than 25/32 inches above the surface of the floor covering.
2) High level opening
①The opening shall not be less than 50% of Anvmin in Table 12.
②The opening is a permanent opening that cannot be closed.
③The opening shall be at least 59 inches above the floor.
④The height of the opening is not less than 25/32 inches.
3) Room size requirement
①The room into which refrigerant can leak, plus the connected adjacent room(s) shall have a total area not less than Amin. Amin is shown in Table 14.
②The room area in which the unit is installed shall be not less than 20% Amin. Amin is shown in Table 14.

NOTICE

The requirement for the second opening can be met by drop ceilings, ventilation ducts, or similar arrangements that provide an airflow path between the connected rooms.

The minimum opening for natural ventilation (Anvmin) in connected rooms is related to the room area (A), the actual refrigerant charge of refrigerant in the system (Mc), and the allowable MAXIMUM REFRIGERANT CHARGE in the system (Mmax), Anvmin can be determined according to Table 12.

Figure 17. Opening conditions for connected rooms

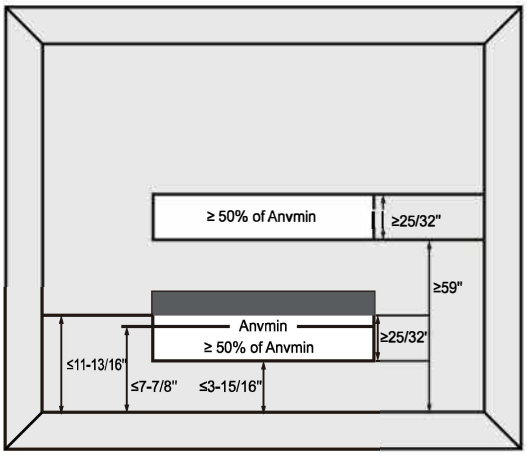

The minimum opening area for connected rooms

Table 12.

A		Mc		Mmax		Anvmin	
ft²	m²	lb-oz	kg	lb-oz	kg	ft²	m²
100	9.3	17-3	7.8	6-10	3	1.3	0.12
110	10.2	17-3	7.8	7-5	3.3	1.2	0.11
120	11.1	17-3	7.8	8-0	3.6	1.1	0.10
130	12.1	17-3	7.8	8-10	3.9	1.0	0.09
140	13.0	17-3	7.8	9-5	4.2	1.0	0.09
150	13.9	17-3	7.8	10-0	4.5	0.9	0.08
160	14.9	17-3	7.8	10-10	4.8	0.8	0.07
170	15.8	17-3	7.8	11-5	5.1	0.7	0.07
180	16.7	17-3	7.8	12-0	5.4	0.6	0.06
190	17.7	17-3	7.8	12-10	5.7	0.5	0.05
200	18.6	17-3	7.8	13-5	6	0.5	0.05
210	19.5	17-3	7.8	14-0	6.3	0.4	0.04
220	20.4	17-3	7.8	14-10	6.6	0.3	0.03
230	21.4	17-3	7.8	15-5	6.9	0.2	0.02
240	22.3	17-3	7.8	16-0	7.2	0.1	0.01
250	23.2	17-3	7.8	16-10	7.5	0.1	0.01
260	24.2	17-3	7.8	17-5	7.8	0.0	0.00

Note: Take the Mc=17 lbs 3 oz as an example.
For appliances serving one or more rooms with an air duct system, The room area calculation shall be determined based on the total area of the conditioned space (TA) connected by ducts taking into consideration that the circulating airflow distributed to all the rooms by the appliance integral indoor fan will mix and dilute the leaking refrigerant before entering any room.

The Maximum Refrigerant Charge and Minimum Room Area

If the fan incorporated to an appliance is continuously operated or operation is initiated by a REFRIGERANT DETECTION SYSTEM with a sufficient CIRCULATION AIRFLOW rate, the maximum refrigerant charge (Mmax) and the required minimum room area (Amin) is shown in Table 13 and Table 14.

Table 13. Maximum Refrigerant Charge

A/TA		Mmax		A/TA		Mmax	
ft²	m²	lb-oz	kg	ft²	m²	lb-oz	kg
40	3.7	2-10	1.2	160	14.9	10-10	4.8
50	4.6	3-5	1.5	170	15.8	11-5	5.1
60	5.6	4-0	1.8	180	16.7	12-0	5.4
70	6.5	4-10	2.1	190	17.7	12-10	5.7
80	7.4	5-5	2.4	200	18.6	13-5	6.0
90	8.4	6-0	2.7	210	19.5	14-0	6.3
100	9.3	6-10	3.0	220	20.4	14-10	6.6
110	10.2	7-5	3.3	230	21.4	15-5	6.9
120	11.1	8-0	3.6	240	22.3	16-0	7.2
130	12.1	8-10	3.9	250	23.2	16-10	7.5
140	13.0	9-5	4.2	260	24.2	17-5	7.8
150	13.9	10-0	4.5				

Table 14. Required Minimum Room Area

Mc		Amin/Tamin		Mc		Amin/Tamin	
lb-oz	kg	ft²	m²	lb-oz	kg	ft²	m²
4-6	2.0	66.1	6.1	11-0	5.0	165.3	15.4
4-13	2.2	72.7	6.8	11-7	5.2	171.9	16.0
5-4	2.4	79.3	7.4	11-14	5.4	178.5	16.6
5-11	2.6	86.0	8	12-5	5.6	185.1	17.2
6-2	2.8	92.6	8.6	12-12	5.8	191.7	17.8
6-9	3.0	99.2	9.2	13-3	6.0	198.4	18.4
7-0	3.2	105.8	9.8	13-10	6.2	205.0	19.0
7-7	3.4	112.4	10.4	14-1	6.4	211.6	19.7
7-15	3.6	119.0	11.1	14-8	6.6	218.2	20.3
8-6	3.8	125.6	11.7	14-15	6.8	224.8	20.9
8-13	4.0	132.2	12.3	15-6	7.0	231.4	21.5
9-4	4.2	138.8	12.9	15-14	7.2	238.0	22.1
9-11	4.4	145.5	13.5	16-5	7.4	244.6	22.7
10-2	4.6	152.1	14.1	16-12	7.6	251.2	23.3
10-9	4.8	158.7	14.7	17-3	7.8	257.9	24.0

Table 15. Minimum Circulation Airflow

Mc		Qmin		Mc		Qmin	
lb-oz	kg	CFM	m³/h	lb-oz	kg	CFM	m³/h
4-6	2.0	119	202.7	11-0	5.0	298	506.8
4-13	2.2	131	223.0	11-7	5.2	310	527.0
5-4	2.4	143	243.2	11-14	5.4	322	547.3
5-11	2.6	155	263.5	12-5	5.6	334	567.6
6-2	2.8	167	283.8	12-12	5.8	346	587.8
6-9	3.0	179	304.1	13-3	6.0	358	608.1
7-0	3.2	191	324.3	13-10	6.2	370	628.4
7-7	3.4	203	344.6	14-1	6.4	382	648.6
7-15	3.6	215	364.9	14-8	6.6	393	668.9
8-6	3.8	227	385.1	14-15	6.8	405	689.2
8-13	4.0	238	405.4	15-6	7.0	417	709.5
9-4	4.2	250	425.7	15-14	7.2	429	729.7
9-11	4.4	262	445.9	16-5	7.4	441	750.0
10-2	4.6	274	466.2	16-12	7.6	453	770.3
10-9	4.8	286	486.5	17-3	7.8	465	790.5

Table 16. Refrigerant Charge Limit

Model	mc/kg	TAmin/m2
7.5 Ton	1.7 (system A)	5.2
8.5 Ton	1.95 (system A)	6
10 Ton	2.3 (system A)	7.1
12.5 Ton	3.1 (system A)	9.5

NOTE: The maximum refrigerant charge of Table 13 or the required minimum room area of Table 14 is available only if the following conditions are met: Minimum velocity of 1m/s², which is calculated as the indoor unit airflow divided by the nominal face area of the outlet.

And the grill area shall not be deducted. Minimum airflow rate must meet the corresponding values in Table 15, which is related to the actual refrigerant charge of the system (Mc). R-454B refrigerant leakage sensor is configured.

NOTE: The maximum refrigerant limit described above applies to unventilated areas. If adding additional measures, such as areas with mechanical ventilation or natural ventilation, the maximum refrigerant charge can be increased or the minimum room area can be reduced.

NOTE: As shown in Table 16, the required minimum area of the total conditioned space connected by ducts (TAmin).

NOTE: If the actual room area, outlet height, and refrigerant charge amount are not reflected in the above table, more severe cases need to be considered according to the data in the table.

For appliances containing more than for any refrigerating circuit,the manual shall include a statement advising that an unventilated area where the appliance using FLAMMABLE REFRIGERANTS is installed shall be so constructed that should any refrigerant leak,it will not stagnate so as to create a fire or explosion hazard.This shall include:

-a warning that if appliances with A2L REFRIGERANTS connected via an air duct system to one or more rooms are installed in a room with an area less than>Amin as shown in Table 14, that room shall be without continuously operating open flames(for example an operating gas appliance)or other POTENTIAL IGNITION SOURCES (for example an operating electric heater,hot surfaces).A flame-producing device may be installed in the same space if the device is provided with an effective flame arrest;

-for appliances using A2L REFRIGERANTS connected via an air duct system to one or more rooms,a warning with the substance of the following:"Auxiliary devices which may be a POTENTIAL IGNITION SOURCE shall not be installed in the duct work.Examples of such POTENTIAL IGNITION SOURCES are hot surfaces with a temperature exceeding 700° C and electric switching devices"

The manufacturer should specify other potential continuously operating sources known to cause ignition of the refrigerant used.

The appliance shall be stored so as to prevent mechanical damage from occurring.

-for appliances using A2L refrigerants connected via an air duct system to one or more rooms, a warning that only auxiliary devices approved by the appliance manufacturer or declared suitable with the refrigerant shall be installed in connecting ductwork. The manufacturer shall list in the instructions all approved auxiliary devices by manufacturer and model number for use with the specific appliance, if those devices have a potential to become an ignition source.

-a warning that if appliances connected via an air duct system to one or more rooms with A2L REFRIGERANTS are installed in a room with an area less than Amin as shown in Table 14. or installed in a room with an EFFECTIVE DISPERSAL VOLUME VED less than the minimum as shown in Table 17, that room shall be without continuously operating open flames (e.g. an operating gas appliance) or other POTENTIAL IGNITION SOURCES (for e.g. an operating electric heater, hot surfaces). A flame-producing device may be installed in the same space if the device is provided with an effective flame arrest.

Table 17. Minimum Effective Dispersal Volume

Mc		VED		Mc		VED	
lb-oz	kg	ft^3	m^3	lb-oz	kg	ft^3	m^3
4-6	2.0	477	13.5	11-0	5.0	1193	33.8
4-13	2.2	525	14.9	11-7	5.2	1241	35.1
5-4	2.4	573	16.2	11-14	5.4	1289	36.5
5-11	2.6	620	17.6	12-5	5.6	1336	37.8
6-2	2.8	668	18.9	12-12	5.8	1384	39.2
6-9	3.0	716	20.3	13-3	6.0	1432	40.5
7-0	3.2	764	21.6	13-10	6.2	1479	41.9
7-7	3.4	811	23.0	14-1	6.4	1527	43.2
7-15	3.6	859	24.3	14-8	6.6	1575	44.6
8-6	3.8	907	25.7	14-15	6.8	1623	45.9
8-13	4.0	954	27.0	15-6	7.0	1670	47.3
9-4	4.2	1002	28.4	15-14	7.2	1718	48.6
9-11	4.4	1050	29.7	16-5	7.4	1766	50.0
10-2	4.6	1098	31.1	16-12	7.6	1813	51.4
10-9	4.8	1145	32.4	17-3	7.8	1861	52.7

Maintenance

⚠ WARNING

PERSONAL INJURY / PROPERTY DAMAGE HAZARD

Failure to follow this warning could result in property damage, personal injury, or death.
For continued performance, reliability, and safety, the only approved accessories and replacement parts are those specified by the equipment manufacturer. The use of non-manufacturer approved parts and accessories could invalidate the equipment limited warranty and result in fire risk, equipment malfunction, and failure. Please review manufacturer's instructions and replacement part catalogs available from your equipment supplier.

⚠ WARNING

ELECTRICAL SHOCK, FIRE OR EXPLOSION HAZARD

Failure to follow safety warnings exactly could result in dangerous
operation, serious injury, death or property damage.
Improper servicing could result in dangerous operation, serious injury, death or property damage.

- **Before servicing, disconnect all electrical power to furnace.**
- **When servicing controls, label all wires prior to disconnecting. Reconnect wires correctly.**
- **Verify proper operation after servicing.**

Make sure all personnel are standing clear of the unit before proceeding. The system components will start when the power is applied.

The manual shall contain specific information about the required qualification of the working personnel for maintenance, service and repair operations.
Every working procedure that affects safety means shall only be carried out by competent persons.
Examples for such working procedures are:
- breaking into the refrigerating circuit.
- opening of sealed components.
- opening of ventilated enclosures.

⚠ WARNING

PERSONAL INJURY / PROPERTY DAMAGE HAZARD

refrigerating system, comply with the following precautions prior to conducting work on the system:

- **shall be undertaken according to controlled procedures so as to minimize the risk of the presence of flammable gases or vapors while the work is being performed.**
- **All maintenance staff and others working in the local area shall be instructed on the nature of work being carried out. Work in confined spaces shall be avoided.**
- **The area shall be checked with an appropriate refrigerant detector prior to and during work, to ensure the technician is aware of potentially toxic or flammable environment.**
- **If any hot work is to be conducted on the refrigerating equipment or any associated parts, appropriate fire extinguishing equipment shall be available and easily accessible. Have a dry powder or CO2 fire extinguisher adjacent to the charging area.**
- **When carrying out work in relation to a refrigerating system that involves exposing any pipe work, no sources of ignition shall be used in such a manner that it may lead to the risk of fire or explosion. All possible ignition sources, including cigarette smoking, should be kept sufficiently far away from the site of installation, repair, or removal and disposal of the unit, during which refrigerant can possibly be released into the surrounding space. Prior to beginning work, the area around the equipment is to be surveyed to make sure that there are no flammable hazards or ignition risks. "No Smoking" signs shall be clearly displayed.**

Ensure that the area is in the open or that it is adequately ventilated before opening he system or conducting any hot work. A degree of ventilation shall continue during the period that the work is carried out.
The ventilation should safely disperse any released refrigerant and preferably expel it externally into the surroundings.

⚠ WARNING

Where electrical components are being changed, they shall be fit according to their purpose and to the correct specification. At all times the manufacturer's maintenance and service guidelines shall be followed. If in doubt, consult the manufacturer's technical department for assistance. The following checks shall be applied to installations using flammable refrigerants:
– The actual refrigerant charge is in accordance with the room size within which the refrigerant containing parts are installed.
– The ventilation machinery and outlets are operating adequately and are not obstructed.
– If an indirect refrigerating circuit is being used, the secondary circuit shall be checked for the presence of refrigerant.
– Equipment marking must remain visible and legible. Markings and signs that are illegible shall be corrected.

Refrigerating pipe or components are installed in a position where they are unlikely to be exposed to any substances which may corrode refrigerant containing components, unless the components are constructed of materials that are inherently resistant to corrosion or are suitably protected against corrosion.

Repair and maintenance of electrical components shall include initial safety checks and component inspection procedures. If a fault exists that could compromise safety, then no electrical supply shall be connected to the circuit until the fault has been dealt with satisfactorily.

If the fault cannot be corrected immediately but it is necessary to continue operation, an adequate temporary solution shall be used. This shall be reported to the owner of the equipment so that all parties are advised. Initial safety checks shall include:
– That capacitors are discharged: this shall be done in a safe manner to avoid the possibility of sparking.
– That no live electrical components and wiring are exposed while charging, recovering or purging the system.
– That there is continuity of earthing.

⚠ WARNING

Sealed electrical components shall be replaced.

Intrinsically safe components must be replaced.

Check that cabling will not be subject to wear, corrosion, excessive pressure, vibration, sharp edges or any other adverse environmental effects. The check shall also take into account the effects of aging or continual vibration from sources such as compressors or fans.

Under no circumstances shall potential sources of ignition be used while searching for or detection of refrigerant leaks. A halide torch (or any other detector using a naked flame) shall not be used.

Electronic leak detectors may be used to detect refrigerant leaks but, in the case of flammable refrigerants, the sensitivity may not be adequate, or may need re-calibration. (Detection equipment shall be calibrated in a refrigerant-free area.)
Ensure that the detector is not a potential source of ignition and is suitable for the refrigerant used.
Leak detection equipment shall be set at a percentage of the LFL of the refrigerant and shall be calibrated for the refrigerant employed, and the appropriate percentage of gas (25 % maximum) is confirmed.

If a leak is suspected, all naked flames shall be removed/extinguished.

If a leakage of refrigerant which requires brazing is found, all of the refrigerant shall be recovered from the system, or isolated(by means of shut off valves) in a part of the system remote from the leak.

Leak detection fluids are also suitable for use with most refrigerants but the use of detergents containing chlorine shall be avoided as the chlorine may react with the refrigerant and corrode the copper pipe-work.

NOTE: Examples of leak detection fluids are
-bubble method,
-fluorescent method agents.

⚠ WARNING

When breaking into the refrigerant circuit to make repairs - or for any other purpose-conventional procedures shall be used.
However, for flammable refrigerants it is important that best practice be followed, since flammability is a consideration. The following procedure shall be adhered to:
- safely remove refrigerant following local and national regulations.
- evacuate.
-purge the circuit with inert gas.
- evacuate.
- continuously flush or purge with inert gas when using flame to open circuit; and.
- open the circuit.

The refrigerant charge shall be recovered into the correct recovery cylinders if venting is not allowed by local and national codes. For appliances containing flammable refrigerants, the system shall be purged with oxygen-free nitrogen to render the appliance safe for flammable refrigerants. This process might need to be repeated several times. Compressed air or oxygen shall not be used for purging refrigerant systems.

For appliances containing flammable refrigerants, refrigerants purging shall be achieved by breaking the vacuum in the system with oxygen-free nitrogen and continuing to fill until the working pressure is achieved, then venting to atmosphere, and finally pulling down to a vacuum. This process shall be repeated until no refrigerant is within the system. When the final oxygen-free nitrogen charge is used, the system shall be vented down to atmospheric pressure to enable work to take place.

The outlet for the vacuum pump shall not be close to any potential ignition sources, and ventilation shall be available.

⚠ WARNING

Ensure that contamination of different refrigerants does not occur when using charging equipment.
Hoses or lines shall be as short as possible to minimise the amount of refrigerant they contain.

Cylinders shall be kept upright. Ensure that the refrigeration system is grounded prior to charging the system with refrigerant.

⚠ WARNING

Label the system when charging is complete (if it is not already labeled).

Take extreme care not to overfill the refrigeration system.

Prior to recharging the system, it shall be pressure-tested with the appropriate purging gas. The system shall be leak-tested on completion of charging but prior to commissioning. A follow up leak test shall be carried out prior to leaving the site.

Before carrying out this procedure, it is essential that the technician is completely familiar with the equipment and all its detail. It is recommended that all refrigerants are recovered safely. Prior to the task being carried out, an oil and refrigerant sample shall be taken in case analysis is required prior to re-use of reclaimed refrigerant.
It is essential that electrical power is available before the task is commenced.
a) Become familiar with the equipment and its operation.
b) Isolate system electrically.
c) Before attempting the procedure ensure that:
– mechanical handling equipment is available, if required, for handling refrigerant cylinders;
– all personal protective equipment is available and being used correctly;
– the recovery process is supervised at all times by a competent person;
– recovery equipment and cylinders conform to the appropriate standards.
d) Pump down refrigerant system, if possible.
e) If a vacuum is not possible, make a manifold so that refrigerant can be removed from various parts of the system.
f) Make sure that the cylinder is situated on the scales before recovery takes place.
g) Start the recovery machine and operate it in accordance with the manufacturer's instructions.
h) Do not overfill cylinders. (No more than 80% volume liquid charge).
i) Do not exceed the maximum working pressure of the cylinder, even temporarily.
j) When the cylinders have been filled correctly and the process has been completed, make sure that the cylinders and the equipment are removed from site promptly and all isolation valves on the equipment are closed off.
k) Recovered refrigerant shall not be charged into another refrigeration system unless it has been cleaned and checked.

⚠ WARNING

Equipment shall be labeled stating that it has been de-commissioned and emptied of refrigerant. The label shall be dated and signed.
Ensure that there are labels on the equipment stating the equipment contains flammable refrigerant.

When removing refrigerant from a system, either for servicing or decommissioning, it is recommended that all refrigerants are removed safely.

When transferring refrigerant into cylinders, ensure that only appropriate refrigerant recovery cylinders are employed. Ensure that the correct number of cylinders for holding the total system charge is available. All cylinders to be used are designated for the recovered refrigerant and labelled for that refrigerant (i.e.special cylinders for the recovery of refrigerant). Cylinders shall be complete with pressure-relief valve and associated shut-off valves in good working order. Empty recovery cylinders are evacuated and, if possible, cooled before recovery occurs.

The recovery equipment shall be in good working order with a set of instructions concerning the equipment that is at hand and shall be suitable for the recovery of the flammable refrigerant. If in doubt, the manufacturer should be consulted. In addition, a set of calibrated weighing scales shall be available and in good working order. Hoses shall be complete with leak-free disconnect couplings and in good condition.

The recovered refrigerant shall be processed according to local legislation in the correct recovery cylinder, and the relevant waste transfer note arranged. Do not mix refrigerants in recovery units and especially not in cylinders.
If compressors or compressor oils are to be removed, ensure that they have been evacuated to an acceptable level to make certain that flammable refrigerant does not remain within the lubricant. The compressor body shall not be heated by an open flame or other ignition sources to accelerate this process. When oil is drained from a system, it shall be carried out safely.

Fan Belt Adjustment-Belt Drive Units

⚠ WARNING

Rotating Components!

Failure to disconnect power before servicing could result in rotating components cutting and slashing technician which could result in death or serious injury.

Disconnect all electric power, including remote disconnects before servicing. Follow proper lockout/tagout procedures to ensure the power can not be inadvertently energized.

The fan belts must be inspected periodically to assure proper unit operation. Replacement is necessary if the belts appear frayed or worn. Units with dual belts require a matched set of belts to ensure equal belt length.

When removing or installing the new belts, do not stretch them over the sheaves. Loosen the belts using the belt tension adjustment bolts on the motor mounting base.

Once the new belts are installed, using a Browning or Gates tension gauge (or equivalent), adjust the belt tension as follows:

1. To determine the appropriate belt deflection:
   a. Measure the center-to-center shaft distance (in inches) between the fan and motor sheaves.
   b. Divide the distance measured in Step 1a by 64; the resulting value represents the amount of belt deflection that corresponds to the proper belt tension.
2. Set the large O-ring on the belt tension gauge at the deflection value determined in Step 1b.
3. Set the small O-ring at zero on the force scale of the gauge plunger.
4. Place the large end of the gauge at the center of the belt span; then depress the gauge plunger until the large O-ring is even with the top of the next belt or even with a straightedge placed across the fan and motor sheaves.
5. Remove the belt tension gauge. The small O-ring now indicates a number other than zero on the plunger's force scale. This number represents the force (in pounds) required to give the needed deflection.
6. Compare the "force" scale reading (Step 5) with the appropriate "force" value listed in the Belt tension table. If the "force" reading is outside the range, readjust the belt tension.

   Note: *Actual belt deflection "force" must not exceed the maximum "force" value shown in the Belt tension measurement and deflection ranges table.*
7. Recheck the belt tension at least twice during the first 2 to 3 days of operation. Belt tension may decrease until the new belts are "run in".

Figure 18. Belt tension gauge

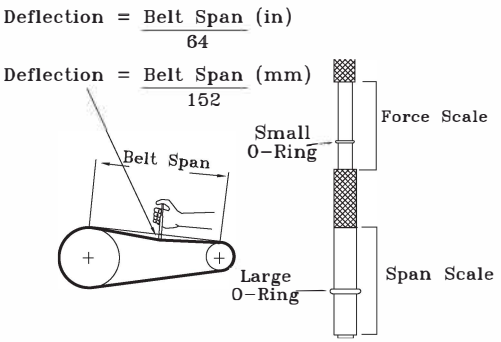

The exhaust gas fan is that lubrication of motor, blower, or fan bearings should not be done, and others should Check the supply fan belts for proper tension and the fan bearings for sufficient lubrication.

Table 18. Belt tension measurement and deflection ranges (in/lb)

Belts Cross Section	Small P.D Range (in)	Deflection Force (lb)					
		Super Gripbelts (in)		Gripnotch (in)		Steel Cable Gripbelts (in)	
		Min.	Max.	Min.	Max	Min.	Max.
A	3.0–3.6	3.00	4.50	3.87	5.50	3.25	4.00
	3.8–4.8	3.50	5.00	4.50	6.25	3.75	4.75
	5.0–7.0	4.00	5.50	5.00	6.87	4.25	5.25
B	3.4–4.2	4.00	5.50	5.75	8.00	4.50	5.50
	4.4–5.6	5.12	7.12	6.50	9.12	5.75	7.25
	5.8–8.8	6.37	8.75	7.37	10.12	7.00	8.75

Table 19. Belt tension measurement and deflection ranges (mm/kg)

Belts Cross Section	Small P.D Range (mm)	Deflection Force (kg)					
		Super Gripbelts (mm)		Gripnotch (mm)		Steel Cable Gripbelts (mm)	
		Min.	Max.	Min.	Max.	Min.	Max
A	13.3–16.0	13.3	20.0	17.2	24.5	14.5	17.8
	16.9–21.4	15.6	22.2	20.0	27.8	16.7	21.1
	22.0–31.1	17.8	24.5	22.2	30.6	18.9	23.4
B	15.1–18.7	17.8	24.5	25.6	35.6	20.0	24.5
	19.6–24.9	22.8	31.7	28.9	40.6	25.6	32.3
	25.8–39.1	28.4	38.9	32.8	45.0	31.1	38.9

Monthly Maintenance

Before completing the following checks, turn the unit OFF and lock the main power disconnect switch open.

⚠ WARNING

Hazardous Voltage!

Failure to disconnect power before servicing could result in death or serious injury.

Disconnect all electric power, including remote disconnects before servicing. Follow proper lockout/tagout procedures to ensure the power can not be inadvertently energized. Verify that no power is present with a voltmeter.

Filters

Inspect the return air filters. Clean or replace them if necessary.

Condensate Overflow Switch

During maintenance, the switch float (black ring) must be checked to ensure free movement up and down.

Cooling Season

- ☐ Check the unit's drain pans and condensate piping to ensure that there are no blockages.
- ☐ Inspect the evaporator and condenser coils for dirt, bent fins, etc. If the coils appear dirty, clean them according to the instructions described in "Coil Cleaning" later in this section.
- ☐ Manually rotate the condenser fans to ensure free movement and check motor bearings for wear. Verify that all of the fan mounting hardware is tight.
- ☐ Inspect the F/A-R/A damper hinges and pins to ensure that all moving parts are securely mounted. Keep the blades clean as necessary.

⚠ WARNING

Rotating Components!

Failure to disconnect power before servicing could result in rotating components cutting and slashing technician which could result in death or serious injury.

During installation, testing, servicing and troubleshooting of this product it may be necessary to work with live and exposed rotating components. Have a qualified or licensed service individual who has been properly trained in handling exposed rotating components, perform these tasks.

NOTICE

Equipment Damage!

Forcibly turning the motor shaft can damage the gear train and motor beyond repair.

Never turn the motor shaft by hand or with a wrench.

- ☐ Verify that all damper linkages move freely; lubricate with white grease, if necessary.
- ☐ Check supply fan motor bearings; repair or replace the motor as necessary.
- ☐ Check the fan shaft bearings for wear. Replace the bearings as necessary.
- ☐ Check the supply fan belt(s). If the belts are frayed or worn, replace them. Refer to the "Fan Belt Adjustment-Belt Drive Units," p. 36 for belt replacement and adjustments.
- ☐ Verify that all wire terminal connections are tight.
- ☐ Remove any corrosion present on the exterior surfaces of the unit and repaint these areas.
- ☐ Generally inspect the unit for unusual conditions (e. g., loose access panels, leaking piping connections, etc.)
- ☐ Make sure that all retaining screws are reinstalled in the unit access panels once these checks are complete.
- ☐ With the unit running, check and record the following:
  - ambient temperature
  - compressor oil level (each circuit)
  - compressor suction and discharge pressures (each circuit)
  - superheat and subcooling (each circuit)

Record this data on an "operator's maintenance log" like the one shown in Sample maintenance log table in Final Process Section. If the operating pressures indicate a refrigerant shortage, measure the system superheat and system subcooling. For guidelines, refer to "Compressor Start-Up," p. 27.

Important: *Do not release refrigerant to the atmosphere! If adding or removing refrigerant is required, the service technician must comply with all federal, state and local laws. Refer to general service bulletin MSCU-SB-1 (latest edition).*

Heating Season

The furnace system shall be inspected at least once a year by a qualified service person.

- ☐ Inspect the unit's air filters. If necessary, clean or replace them.
- ☐ Check supply fan motor bearings; repair or replace the motor as necessary.
- ☐ Inspect both the main unit control panel and heat section control box for loose electrical components and terminal connections, as well as damaged wire insulation. Make any necessary repairs.
- ☐ Verify that the electric heat system operates properly.

Coil Cleaning

Regular coil maintenance, including annual cleaning enhances the unit's operating efficiency by minimizing the following:

- Compressor head pressure and amperage draw
- Evaporator water carryover
- Fan brake horsepower
- Static pressure losses
- Airflow reduction

At least once each year, or more often if the unit is located in a "dirty" environment, clean the condenser coils using the instructions outlined below. Be sure to follow these instructions as closely as possible to avoid damaging the coils.

⚠ WARNING

Hazardous Chemicals!

Coil cleaning agents can be either acidic or highly alkaline and can burn severely if contact with skin or eyes occurs.

Handle chemical carefully and avoid contact with skin. ALWAYS wear Personal Protective Equipment (PPE) including goggles or face shield, chemical resistant gloves, boots, apron or suit as required. For personal safety refer to the cleaning agent manufacturer's Materials Safety Data Sheet and follow all recommended safe handling practices.

Microchannel (MCHE) Coils

NOTICE

Coil Damage!

Failure to follow instructions below could result in coil damage.
DO NOT use any detergents with microchannel condenser coils.
Use pressurized water or air ONLY, with pressure no greater than 600psi.
For additional information regarding the proper microchannel coil cleaning procedure, refer to RT-SVB83*-EN

Due to the soft material and thin walls of the MCHE coils, the traditional field maintenance method recommended for Round Tube Plate Fin (RTPF) coils does not apply to microchannel coils. Moreover, chemical cleaners are a risk factor to MCHE due to the material of the coil. The manufacturer does not recommend the use of chemical cleaners to clean microchannel coils. Using chemical cleaners could lead to warranty claims being further evaluated for validity and failure analysis.

The recommended cleaning method for microchannel condenser coils is pressurized water or air with a non-pinpoint nozzle and an ECU of at least 180 with pressure no greater than 600 psi. To minimize the risk of coil damage, approach the cleaning of the coil with the pressure washer aimed perpendicular to the face of the coil during cleaning. Optimum clearance between the sprayer nozzle and the microchannel coil is 1”–3”.

Final Process

For future reference, record the unit data below in the blanks provided.

Table 20. Unit data log

Complete Unit Model Number	
Unit Serial Number	
Wiring Diagram Numbers (from unit control panel)	
-schematic(s)	
-connections	
Network ID	

Table 21. Sample maintenance log

Date	Current Ambient Temp F/C	Refrigerant Circuit #1					Refrigerant Circuit #2				
		Compr. Oil Level	Suct. Press. Psig/kPa	Disch. Press Psig/kPa	Superheat F/C	Sub-cool F/C	Compr. Oil Level	Suct. Press. Psig/kPa	Disch. Press Psig/kPa	Superheat F/C	Sub-cool F/C
		- ok - low					- ok - low				
		- ok - low					- ok - low				
		- ok - low					- ok - low				
		- ok - low					- ok - low				
		- ok - low					- ok - low				
		- ok - low					- ok - low				
		- ok - low					- ok - low				
		- ok - low					- ok - low				
		- ok - low					- ok - low				
		- ok - low					- ok - low				
		- ok - low					- ok - low				
		- ok - low					- ok - low				
		- ok - low					- ok - low				
		- ok - low					- ok - low				

Variable Frequency Drive (VFD)

If installed in an appropriate environment, the VFD requires very little maintenance.

Note: Do not perform wiring, inspection or repair operations while the power is on. Before starting work, be sure to switch off the power of all machines. After the power is switch off, there is still residual voltage in the capacitor inside the inverter. It is necessary to confirm that the main circuit voltage has dropped to a safe level, and wait 5 minutes before performing related operations to avoid personal accidents.

Replacing the Cooling Fan

When replacing the cooling fan, please use the original fan. To purchase the original fan, please contact the agent where you purchased the product or the sales department of our company. There are several models equipped with multiple cooling fans in the inverter. In order to maximize the service life of the product, all fans need to be replaced at the same time.

The replacement of other components requires very strict maintenance technology and product familiarity, and must undergo strict testing before being put into use after replacement. It is not recommended that users replace other internal components by themselves. If you really need to replace it, please contact the agent where you purchased the product or the sales department of our company.

Reforming the capacitors

The drive DC link capacitors need to be reformed (re-aged) if the drive has been non-operational for more than one year. Without reforming, capacitors may be damaged when the drive starts to operate.

In order to prevent the capacitors from deteriorating, please energize them for at least 1 hour per year.

If there is no power on for more than two years, please use the adjustable power supply to slowly increase the voltage from 0V to the rated voltage of the inverter within 2 minutes to 3 minutes, and then activate the main circuit electrolytic capacitor (no-load power on for more than 1 hour). In the subsequent operation, please perform normal wiring and confirm that there is no abnormality of the inverter, overcurrent, motor vibration, speed change, etc. during operation.

Replacing the fuse

When replacing the fuses, please use the original fuses. To purchase the original fuses as shown in Table 22, please contact the agent where you purchased the product or the sales department of our company.
The replacement of fuses must undergo strict testing before being put into use after replacement. It is not recommended that users replace fuses by themselves. If you really need to replace it, please contact the agent where you purchased the product or the sales department of our company.

Table 22. Relevant parameters of fuse

Voltage	Diameter	Length	Rated Working Voltage	Rated Working Current
208/230V	38mm	10.3mm	500VDC	30A
460V	38mm	10.3mm	500VDC	30A+2A
575V	38mm	10.3mm	500VDC	30A+2A

Figure 19. Fuse

Troubleshooting

⚠ WARNING

Hazardous Service Procedures!

Failure to follow all precautions in this manual and on the tags, stickers, and labels could result in death or serious injury.

Technicians, in order to protect themselves from potential electrical, mechanical, and chemical hazards, MUST follow precautions in this manual and on the tags, stickers, and labels, as well as the following instructions: Unless specified otherwise, disconnect all electrical power including remote disconnect and discharge all energy storing devices such as capacitors before servicing. Follow proper lockout/tagout procedures to ensure the power can not be inadvertently energized. When necessary to work with live electrical components, have a qualified licensed electrician or other individual who has been trained in handling live electrical components perform these tasks.

Standard Troubleshooting

The IGN has the ability to provide the service personnel with some unit diagnostics and system status information.

Before turning the main power disconnect switch "Off", follow the steps below to check the Ignition Module (IGN).

To prevent injury or death from electrocution, it is the responsibility of the technician to recognize this hazard and use extreme care when performing service procedures with the electrical power energized.

1. Verify LED on face of the phase monitor is green. If LED is red, correct supply power fault.
2. Verify that the LED on the IGN is burning continuously. If the LED is lit, go to Step 5.
3. Verify that the Digital Display on the mainboard is displaying "–". If the Digital Display is right, go to Step 5.
4. If the LED is not lit, verify that 24 Vac is present between R and C. If the LED is not lit and 24 Vac is present replace the IGN. If the Digital Display is not lit and 24 Vac is present replace the mainboard. If 24 Vac is not present, check fuse 2 on the mainboard and check transformer (TNS1). Proceed to Step 5 if necessary.
5. If no failures are indicated, use the TEST mode procedures described in the "Unit Start-Up" section or thermostat to start the unit. This procedure will allow you to check all of the external controls (relays, contactors, etc) and the IGN.
6. Test the system through all of the available modes, and verify operation of all outputs, controls, and modes. Refer to the sequence of operations for each mode, to assist in verifying proper operation. Make the necessary repairs and proceed to Step 6 and Step 7.
7. If no abnormal operating conditions appear in the test mode, exit the test mode by turning the power "Off" at the main power disconnect switch and removing the test mode connections.

Failures

Heating Failure

Verify Heat Failure by Ignition Module (IGN) LED indicator:

Slow Flash: Normal, Call for heat

2 Flash: System Lockout (failed to detect or sustain flame)

3 Flash: Pressure Switch Problem Detected

4 Flash: High limit switch protection device open

5 Flash: Flame sensed and gas valve not energized or flame sensed and no "W" signal

6 Flash: Flame rollout switch open

7 Flash: Thermostat miswired (W1 and W2 swapped)

Simultaneous Heat and Cool Failure

Emergency Stop is activated.

To Clear an Alarm

Once the alarm has been identified and the cause has been removed (for example, replaced faulty sensor), the alarm can be cleared from the display.

Resetting Cooling and Heating Lockouts

Cooling Failures and Heating Lockouts are reset in an identical manner.

Method 1 section explains resetting the system from the space; Method 2 section explains resetting the system at the unit.

Note: *Before resetting Cooling Failures and Heating Lockouts check the Failure Status Diagnostics by the methods previously explained. Diagnostics will be lost when the power to the unit is disconnected.*

Method 1

To reset the system from the space, turn the "Mode" After approximately 30 seconds, turn the "Mode" selection switch at the thermostat to the "Off" position. selection switch to the desired mode, i.e. Heat, Cool or Auto.

Method 2

To reset the system at the unit, cycle the unit power by turning the disconnect switch "Off" and then "On".

Table 23. Troubleshooting chart

Symptom	Possible Cause	Remedy
Unit will not run	Power off or loose electrical connection	Check for correct voltage at compressor contactor in control box
	Thermostat out of calibration-set too high	Reset
	Failed contactor	Check for 24 volts at contactor coil - replace if contacts are open
	Blown fuses	Replace fuses
	Transformer defective	Check wiring - replace transformer
	Interconnecting low voltage wiring damaged	Replace thermostat wiring
Condenser fan runs, compressor doesn't	Condenser fan runs, compressor doesn't	Replace
	Loose connection	Check for correct voltage at compressor - check and tighten all connection
	Compressor stuck, grounded or open motor winding open internal overload	Wait at least 2 hours for overload to reset. If still open, replace the compressor
	Low voltage condition	Determine cause and correct. At compressor terminals, voltages must be within 10% of rating plate volts when unit is operating
Insufficient cooling	Improperly sized unit	Recalculate load
	Improper airflow	Check - should be approximately 400 CFM per ton
	Incorrect refrigerant charge	Charge per procedure attached to unit service panel
	Air, non-condensible or moisture in system	Recover refrigerant, evacuate & recharge, add filter drier
	Incorrect voltage	Determine cause and correct. At compressor terminals, voltages must be within 10% of rating plate volts when unit is operating
Compressor short cycles	Incorrect voltage	At compressor terminals, voltage must be ±10% or nameplate marking when unit is operating.
	Defective overload protector	Replace - check for correct voltage
	Refrigerant undercharge	Add refrigerant
Compressor operates continuously	Dirty air filter	Replace filter
	Unit undersized for load	Decrease load or increase unit size
	Thermostat temperature set too low	Reset thermostat
	Low refrigerant charge	Locate leak, repair, and recharge
	Air in system	Recover refrigerant, evacuate system, and recharge
	Outdoor coil dirty or restricted	Clean coil or remove restriction
Registers sweat	Low evaporator airflow	Increase speed of blower or reduce restriction - replace air filter
High head-low vapor pressure	Restriction in liquid line, expansion device or filter drier	Remove or replace defective component
	Flow check piston size too small	Change to correct size piston
	Incorrect capillary tubes	Change coil assembly
	EEV does not open	Check the control wiring and valve body, replace the coil or valve body

Table 23. Troubleshooting chart (continued)

Symptom	Possible Cause	Remedy
High head-high or normal vapor pressure - Cooling mode	Dirty condenser coi	Clean coil
	Refrigerant overcharge	Correct system charge
	Condenser fan not running	Repair or replace
	Air or non-condensible in system	Recover refrigerant, evacuate & recharge
Low head-high vapor pressures	Defective compressor valves	Replace compressor
	Incorrect capillary tubes	Replace coil assembly
Low vapor - cool compressor - iced evaporator coil	Low evaporator airflow	Increase speed of blower or reduce restriction - replace air filter
	Operating below 65°F outdoors	Add Low Ambient Kit
	Moisture in system	Recover refrigerant - evacuate & recharge - add filter drier
High vapor pressure	Excessive load	Recheck load calculation
	Defective compressor	Replace
Fluctuating head and vapor pressure	Air or non-condensible in system	Recover refrigerant - evacuate and recharge
Gurgle or pulsing noise at expansion device or liquid line	Air or non-condensible in system	Recover refrigerant - evacuate and recharge
Circulating air blower and inducer run continuously, compressor will not start	Manual reset overtemperature control tripped	Reset or replace
	Wire loose in limit circuit	Check wiring
Burners will not ignite	Water in gas line	Drain. Install drip leg.
	No power to furnace	Clean or replace filter as necesary
	No 24 volts power supply to control circuit	Check transformer.
	Miswired or loose connections	Check all wiring and wire nut connections
	Misaligned spark electrodes	Check flame ignition and sense electrode positioning. Adjust as necessary.
	No gas at main burners	Check gas line for air. Purge as necessary. NOTE: After purging gas line of air, wait at least 5 minutes for any gas to dissipate before attempting to light unit.
		Check gas valve
Inadequate heating	Dirty air filter Clean or replace filter as necessary	Check power supply fuses, wiring or circuit breaker.
	Gas input to furnace too low	Check gas pressure at manifold with that on unit nameplate
	Unit undersized for application	Replace with proper unit or add additional unit
	Restricted airflow	Clean or replace filter, remove any restriction
	Limit switch cycles main burners	Check rotation of blower, temperature rise of unit. Adjust as
Poor flame characteristics	Incomplete combustion results in: Aldehyde odors, carbon monoxide, sooting flame, floating flame	Tighten all screws around burner compartment
		Cracked heat exchanger. Replace as necessary.
		Unit over-fired. Reduce input (change orifices or adjust gas line or manifold pressure).
		Check burner alignment
		Inspect heat exchanger for blockage. Clean as necessary.
Both condenser fan and compressor startup and shutdown frequently (about three minutes per cycle)	Abnormal high discharge pressure caused the high pressure switch act	Reference to the remedy of 'High head-high or normal vapor pressure-cooling mode'.

Wiring Diagrams

For 208-230V Units

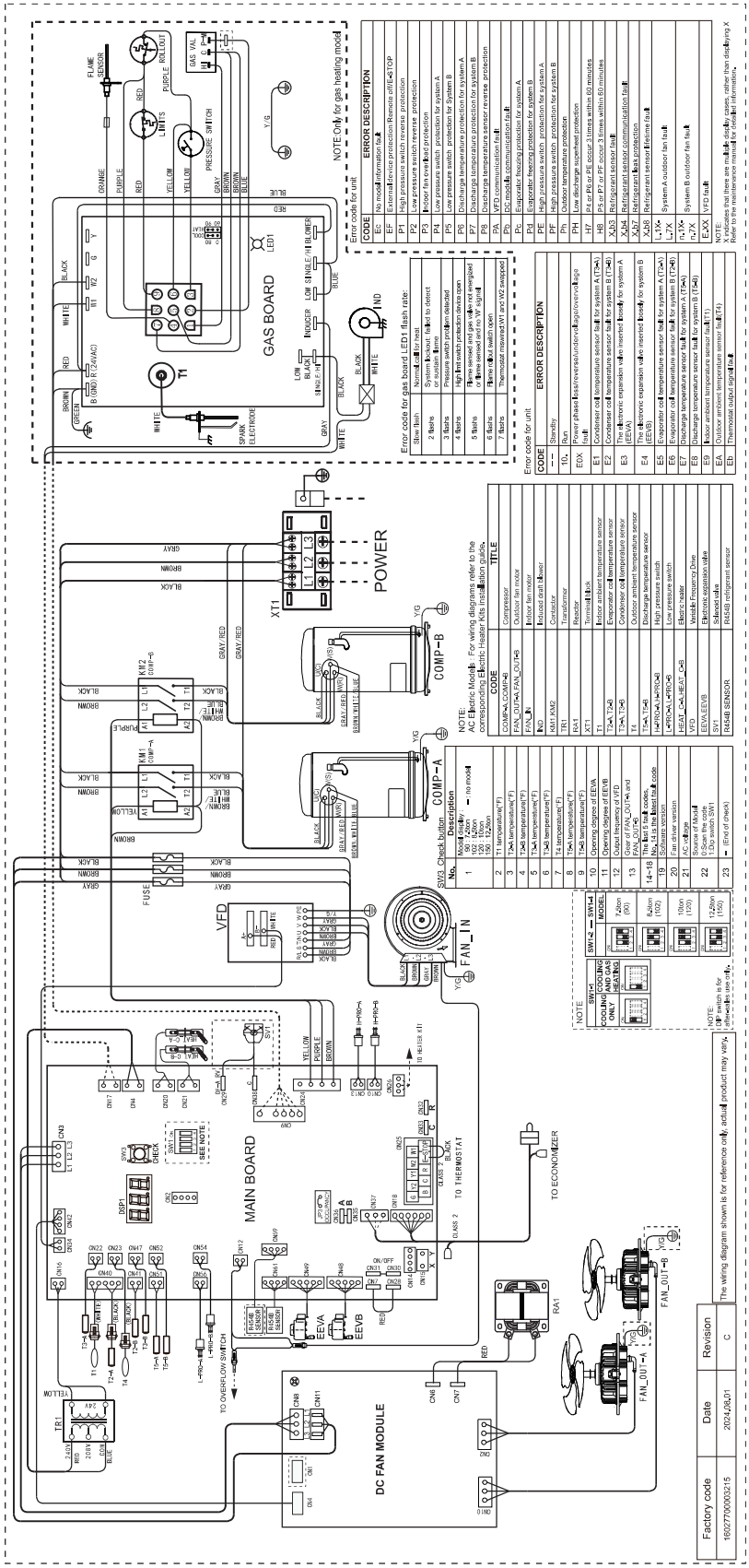

For 460V Units

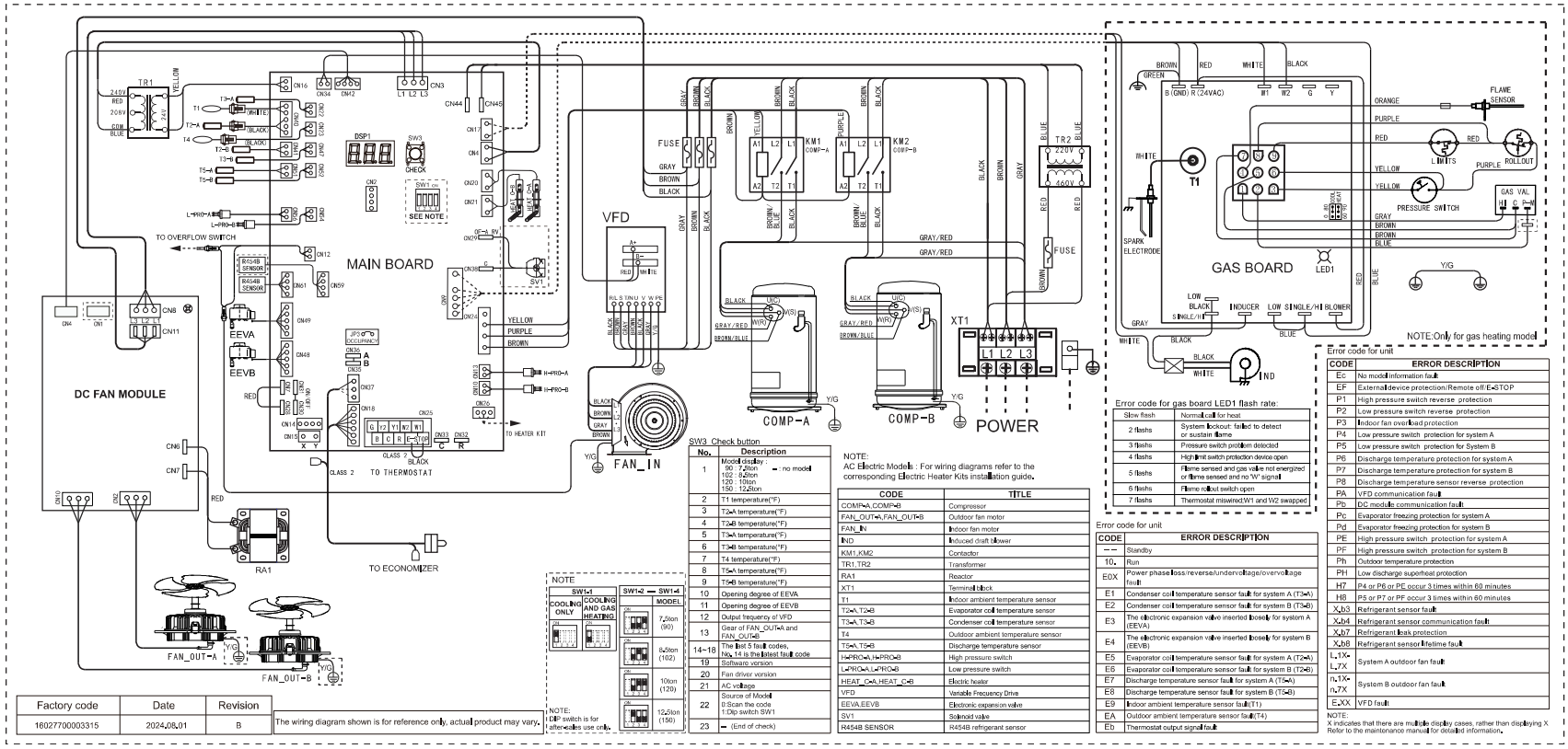

Factory code	Date	Revision
16027700003315	2024.08.01	B

The wiring diagram shown is for reference only, actual product may vary.

NOTE
DIP switch is for after-sales use only.

SW1-1	SW1-2 — SW1-4
COOLING ONLY	COOLING AND GAS HEATING

MODEL
7.5ton (90)
8.5ton (102)
10ton (120)
12.5ton (150)

SW3 Check button

No.	Description
1	Model display : 90 : 7.5ton — : no model 102 : 8.5ton 120 : 10ton 150 : 12.5ton
2	T1 temperature(°F)
3	T2-A temperature(°F)
4	T2-B temperature(°F)
5	T3-A temperature(°F)
6	T3-B temperature(°F)
7	T4 temperature(°F)
8	T5-A temperature(°F)
9	T5-B temperature(°F)
10	Opening degree of EEVA
11	Opening degree of EEVB
12	Output frequency of VFD
13	Gear of FAN_OUT-A and FAN_OUT-B
14~18	The last 5 fault codes, No. 14 is the latest fault code
19	Software version
20	Fan driver version
21	AC voltage
22	Source of Model 0:Scan the code 1:Dip switch SW1
23	— (End of check)

NOTE:
AC Electric Models : For wiring diagrams refer to the corresponding Electric Heater Kits installation guide.

CODE	TITLE
COMP-A,COMP-B	Compressor
FAN_OUT-A,FAN_OUT-B	Outdoor fan motor
FAN_IN	Indoor fan motor
IND	Induced draft blower
KM1,KM2	Contactor
TR1,TR2	Transformer
RA1	Reactor
XT1	Terminal block
T1	Indoor ambient temperature sensor
T2-A,T2-B	Evaporator coil temperature sensor
T3-A,T3-B	Condenser coil temperature sensor
T4	Outdoor ambient temperature sensor
T5-A,T5-B	Discharge temperature sensor
H-PRO-A,H-PRO-B	High pressure switch
L-PRO-A,L-PRO-B	Low pressure switch
HEAT_C-A,HEAT_C-B	Electric heater
VFD	Variable Frequency Drive
EEVA,EEVB	Electronic expansion valve
SV1	Solenoid valve
R454B SENSOR	R454B refrigerant sensor

Error code for gas board LED1 flash rate:

Slow flash	Normal,call for heat
2 flashs	System lockout: failed to detect or sustain flame
3 flashs	Pressure switch problem detected
4 flashs	High limit switch protection device open
5 flashs	Flame sensed and gas valve not energized or flame sensed and no "W" signal
6 flashs	Flame rollout switch open
7 flashs	Thermostat miswired,W1 and W2 swapped

Error code for unit

CODE	ERROR DESCRIPTION
--	Standby
10.	Run
E0X	Power phase loss/reverse/undervoltage/overvoltage fault
E1	Condenser coil temperature sensor fault for system A (T3-A)
E2	Condenser coil temperature sensor fault for system B (T3-B)
E3	The electronic expansion valve inserted loosely for system A (EEVA)
E4	The electronic expansion valve inserted loosely for system B (EEVB)
E5	Evaporator coil temperature sensor fault for system A (T2-A)
E6	Evaporator coil temperature sensor fault for system B (T2-B)
E7	Discharge temperature sensor fault for system A (T5-A)
E8	Discharge temperature sensor fault for system B (T5-B)
E9	Indoor ambient temperature sensor fault(T1)
EA	Outdoor ambient temperature sensor fault(T4)
Eb	Thermostat output signal fault

Error code for unit

CODE	ERROR DESCRIPTION
Ec	No model information fault
EF	External device protection/Remote off/E-STOP
P1	High pressure switch reverse protection
P2	Low pressure switch reverse protection
P3	Indoor fan overload protection
P4	Low pressure switch protection for system A
P5	Low pressure switch protection for System B
P6	Discharge temperature protection for system A
P7	Discharge temperature protection for system B
P8	Discharge temperature sensor reverse protection
PA	VFD communication fault
Pb	DC module communication fault
Pc	Evaporator freezing protection for system A
Pd	Evaporator freezing protection for system B
PE	High pressure switch protection for system A
PF	High pressure switch protection for system B
Ph	Outdoor temperature protection
PH	Low discharge superheat protection
H7	P4 or P6 or PE occur 3 times within 60 minutes
H8	P5 or P7 or PF occur 3 times within 60 minutes
X.b3	Refrigerant sensor fault
X.b4	Refrigerant sensor communication fault
X.b7	Refrigerant leak protection
X.b8	Refrigerant sensor lifetime fault
L.1X- L.7X	System A outdoor fan fault
n.1X- n.7X	System B outdoor fan fault
E.XX	VFD fault

NOTE:
X indicates that there are multiple display cases, rather than displaying X. Refer to the maintenance manual for detailed information.

For 575V Units

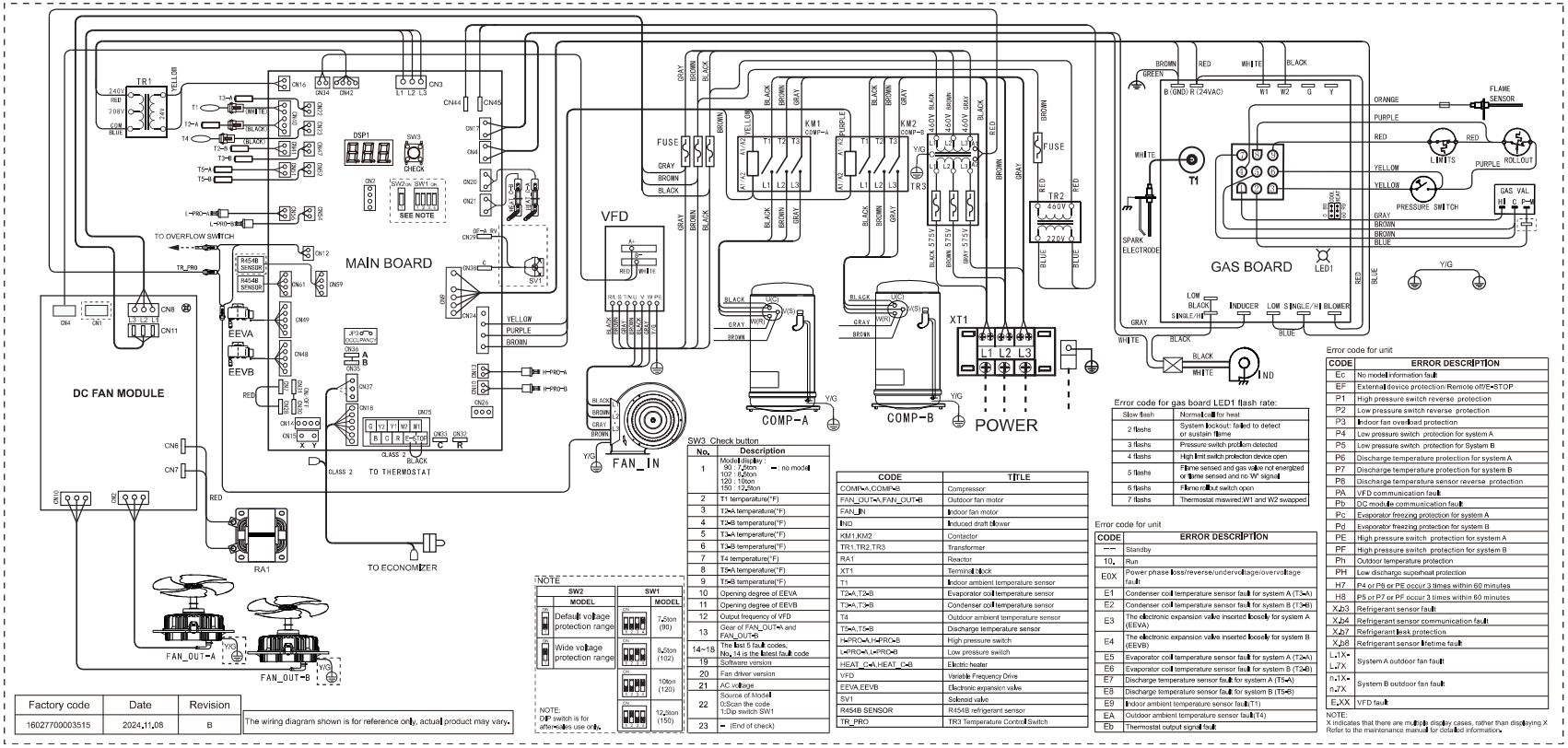

Factory code	Date	Revision
16027700003515	2024.11.08	B

The wiring diagram shown is for reference only, actual product may vary.

NOTE

SW2 MODEL	
Default voltage protection range	
Wide voltage protection range	

SW1 MODEL	
7.5ton (90)	
8.5ton (102)	
10ton (120)	
12.5ton (150)	

NOTE: DIP switch is for after-sales use only.

SW3 Check button

No.	Description
1	Model display : 90 : 7.5ton ---: no model 102 : 8.5ton 120 : 10ton 150 : 12.5ton
2	T1 temperature(°F)
3	T2-A temperature(°F)
4	T2-B temperature(°F)
5	T3-A temperature(°F)
6	T3-B temperature(°F)
7	T4 temperature(°F)
8	T5-A temperature(°F)
9	T5-B temperature(°F)
10	Opening degree of EEVA
11	Opening degree of EEVB
12	Output frequency of VFD
13	Gear of FAN_OUT-A and FAN_OUT-B
14~18	The last 5 fault codes, No. 14 is the latest fault code
19	Software version
20	Fan driver version
21	AC voltage
22	Source of Model 0:Scan the code 1:Dip switch SW1
23	--- (End of check)

CODE	TITLE
COMP-A,COMP-B	Compressor
FAN_OUT-A,FAN_OUT-B	Outdoor fan motor
FAN_IN	Indoor fan motor
IND	Induced draft blower
KM1,KM2	Contactor
TR1,TR2,TR3	Transformer
RA1	Reactor
XT1	Terminal block
T1	Indoor ambient temperature sensor
T2-A,T2-B	Evaporator coil temperature sensor
T3-A,T3-B	Condenser coil temperature sensor
T4	Outdoor ambient temperature sensor
T5-A,T5-B	Discharge temperature sensor
H-PRO-A,H-PRO-B	High pressure switch
L-PRO-A,L-PRO-B	Low pressure switch
HEAT_C-A,HEAT_C-B	Electric heater
VFD	Variable Frequency Drive
EEVA,EEVB	Electronic expansion valve
SV1	Solenoid valve
R454B SENSOR	R454B refrigerant sensor
TR_PRO	TR3 Temperature Control Switch

Error code for gas board LED1 flash rate:

Slow flash	Normal call for heat
2 flashs	System lockout: failed to detect or sustain flame
3 flashs	Pressure switch problem detected
4 flashs	High limit switch protection device open
5 flashs	Flame sensed and gas valve not energized or flame sensed and no 'W' signal
6 flashs	Flame rollout switch open
7 flashs	Thermostat miswired;W1 and W2 swapped

Error code for unit

CODE	ERROR DESCRIPTION
---	Standby
10.	Run
E0X	Power phase loss/reverse/undervoltage/overvoltage fault
E1	Condenser coil temperature sensor fault for system A (T3-A)
E2	Condenser coil temperature sensor fault for system B (T3-B)
E3	The electronic expansion valve inserted loosely for system A (EEVA)
E4	The electronic expansion valve inserted loosely for system B (EEVB)
E5	Evaporator coil temperature sensor fault for system A (T2-A)
E6	Evaporator coil temperature sensor fault for system B (T2-B)
E7	Discharge temperature sensor fault for system A (T5-A)
E8	Discharge temperature sensor fault for system B (T5-B)
E9	Indoor ambient temperature sensor fault(T1)
EA	Outdoor ambient temperature sensor fault(T4)
Eb	Thermostat output signal fault

Error code for unit

CODE	ERROR DESCRIPTION
Ec	No model information fault
EF	External device protection/Remote off/E-STOP
P1	High pressure switch reverse protection
P2	Low pressure switch reverse protection
P3	Indoor fan overload protection
P4	Low pressure switch protection for system A
P5	Low pressure switch protection for System B
P6	Discharge temperature protection for system A
P7	Discharge temperature protection for system B
P8	Discharge temperature sensor reverse protection
PA	VFD communication fault
Pb	DC module communication fault
Pc	Evaporator freezing protection for system A
Pd	Evaporator freezing protection for system B
PE	High pressure switch protection for system A
PF	High pressure switch protection for system B
Ph	Outdoor temperature protection
PH	Low discharge superheat protection
H7	P4 or P6 or PE occur 3 times within 60 minutes
H8	P5 or P7 or PF occur 3 times within 60 minutes
XJb3	Refrigerant sensor fault
XJb4	Refrigerant sensor communication fault
XJb7	Refrigerant leak protection
XJb8	Refrigerant sensor lifetime fault
L.1X- L.7X	System A outdoor fan fault
n.1X- n.7X	System B outdoor fan fault
E.XX	VFD fault

NOTE:
X indicates that there are multiple display cases, rather than displaying X. Refer to the maintenance manual for detailed information.